The Modular Earth Submodel System (MESSy)

Patrick Jöckel,
German Aerospace Center (DLR), Oberpfaffenhofen

Expert Workshop on Modular Coupling in Shelf and Coastal Systems
16-18. September 2013, Schnakenbek

Deutsches Zentrum
für Luft- und Raumfahrt e.V.
in der Helmholtz-Gemeinschaft

Outline

- Coupling: Why and How?
- The concepts behind the Modular Earth Submodel System
  - 3 basic concepts
  - Achievements
  - Examples
- Summary and Outlook

The conceptual need for (modular) “coupling”

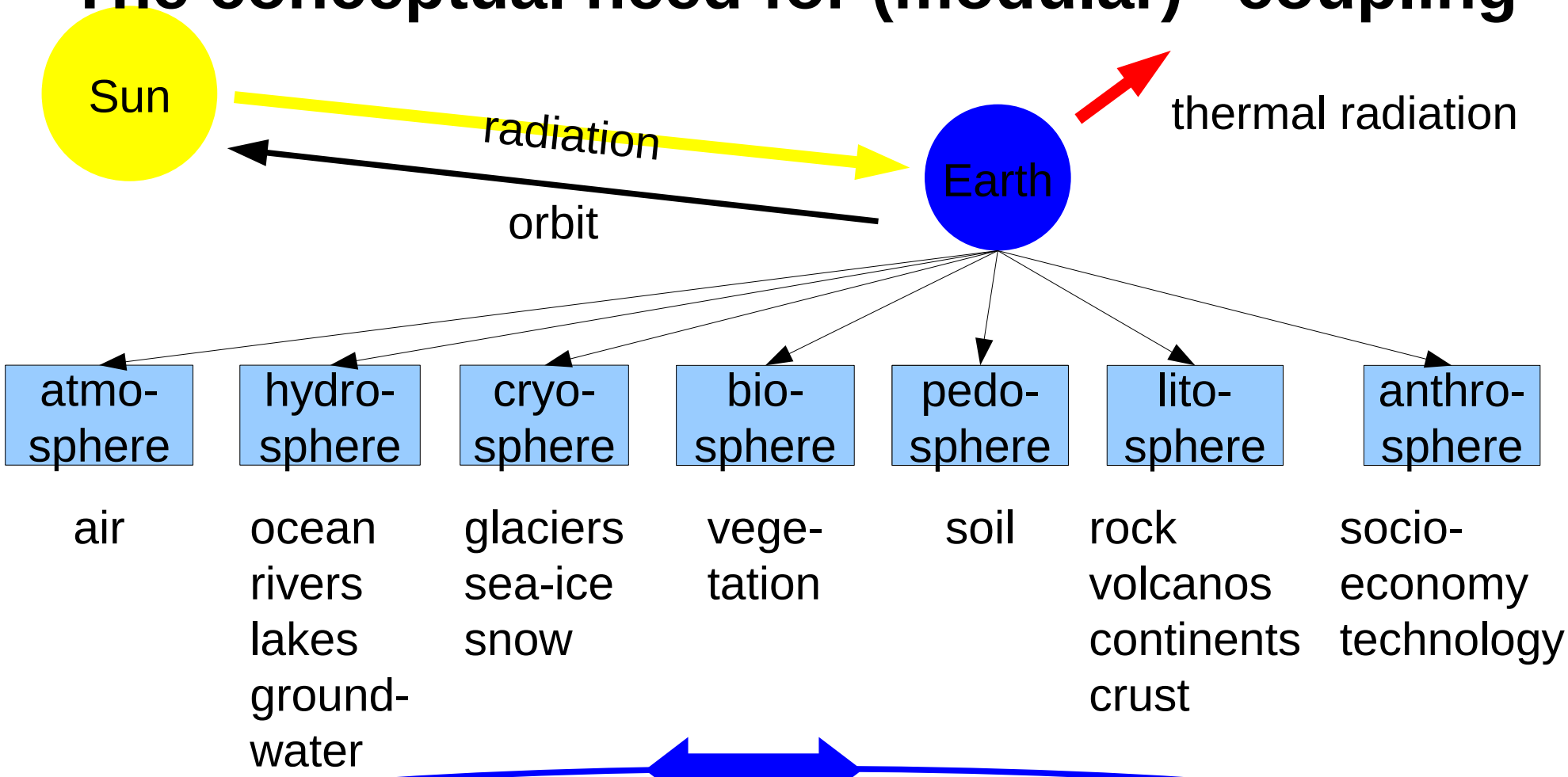

„coupling“: circulation of energy, momentum, constituents

change of „state variables“ by physical, chemical, biological, socio-economic processes

The scientific needs for (modular) “coupling”

- increasing **complexity** requires
  increasingly transparent **control** (user friendly)
- **variable** complexity
  depending on the scientific questions/demands
- minimised effort for extension
  (**plug&play**, exchangeable code, alternative
  implementations of processes)
- **efficient** future developments
  (standardised interfaces)
- **feedback** mechanisms between processes
  (quantification)
- **reproducibility**
- ...

Different ways of “coupling”

internal coupling ⟷ **external coupling**

- Os are part of the *same program unit* (“task”)
- data exchange via *working memory*

{ on-line / direct }

- Os are split into *different program units* (“tasks”)

off-line

- data exchange via *external storage* (files)

on-line

- data exchange via *working memory*

indirect | **direct**

- involves an *add. external* program (“*coupler*”)

(*Jöckel, 2012*)
(*Kerweg & Jöckel, GMD, 2012b*)

Different ways of “coupling”

internal coupling ⟷ **external coupling**

- Os are part of the *same program unit* (“task”)
- data exchange via *working memory*

{ on-line / direct }

- Os are split into *different program units* (“tasks”)

off-line

- data exchange via *external storage* (files)

on-line

- data exchange via *working memory*

indirect

- involves an *add. external* program (“*coupler*”)

direct

choice depends on:
- application
- implementation effort (legacy code!)
- desired sustainability, flexibility, re-usability

→ compromise in minimizing computational and communication overheads

The concepts behind the

The MESSy Consortium

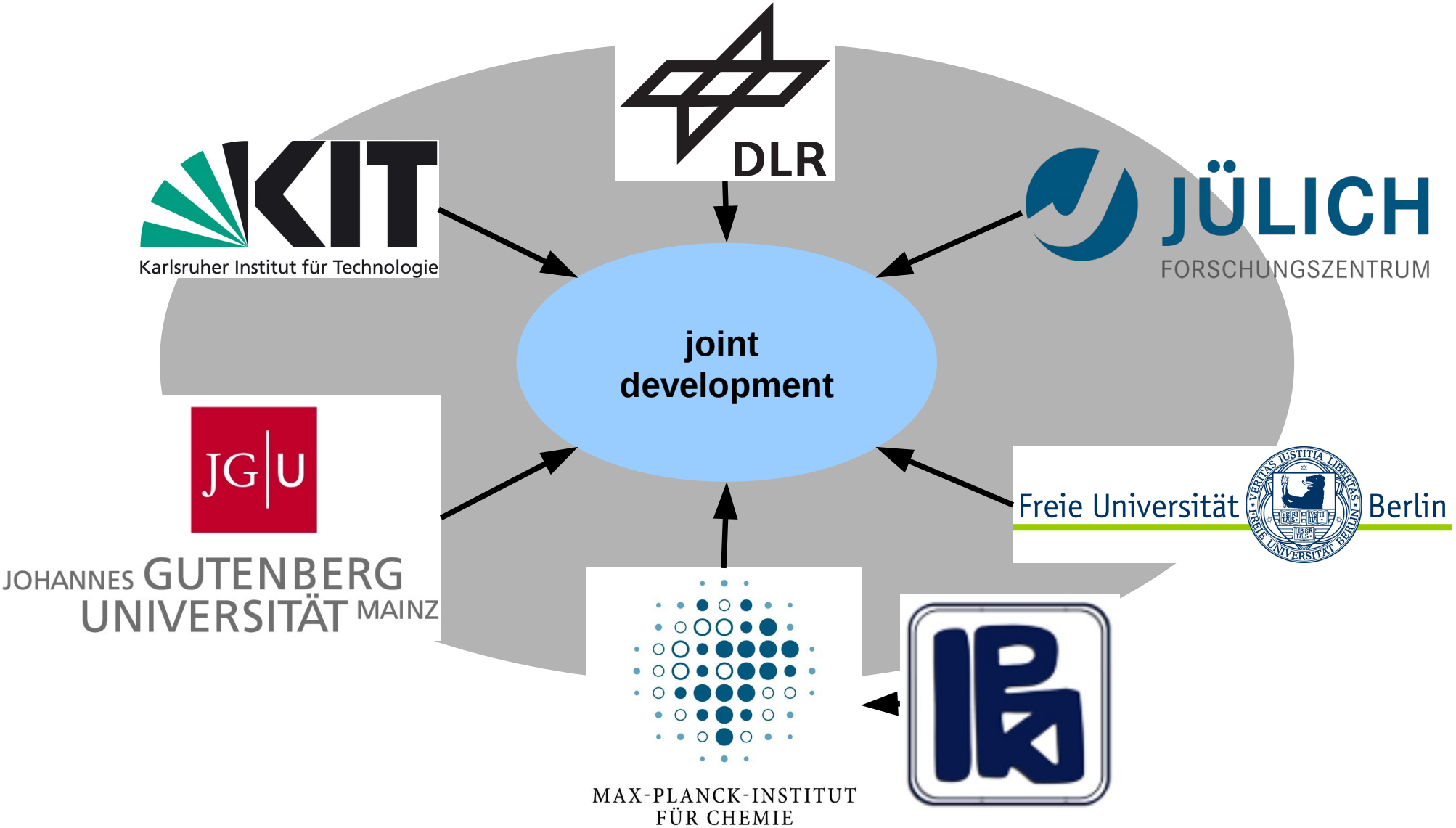

different domains
- **atmosphere**
- **hydrosphere**
- **cryosphere**
- **biosphere**
- **pedosphere**
- **litosphere**
- **anthrosphere**

MODULARISATION

INTEGRATION

process oriented approach !

Comprehensive Earth System Model

- one code / flexible complexity
- transparent (user friendly)
- highly consistent
- single components easily exchangeable
- continuous further development
- **always "state of the art" and applicable for scientific purposes**

simple and efficient interface structure

MODULARI

INTEGRON

process oriented approach !

different domains
- atmosphere
- hydrosphere
- cryosphere
- biosphere
- pedosphe
- litosphere
- anthrosph e

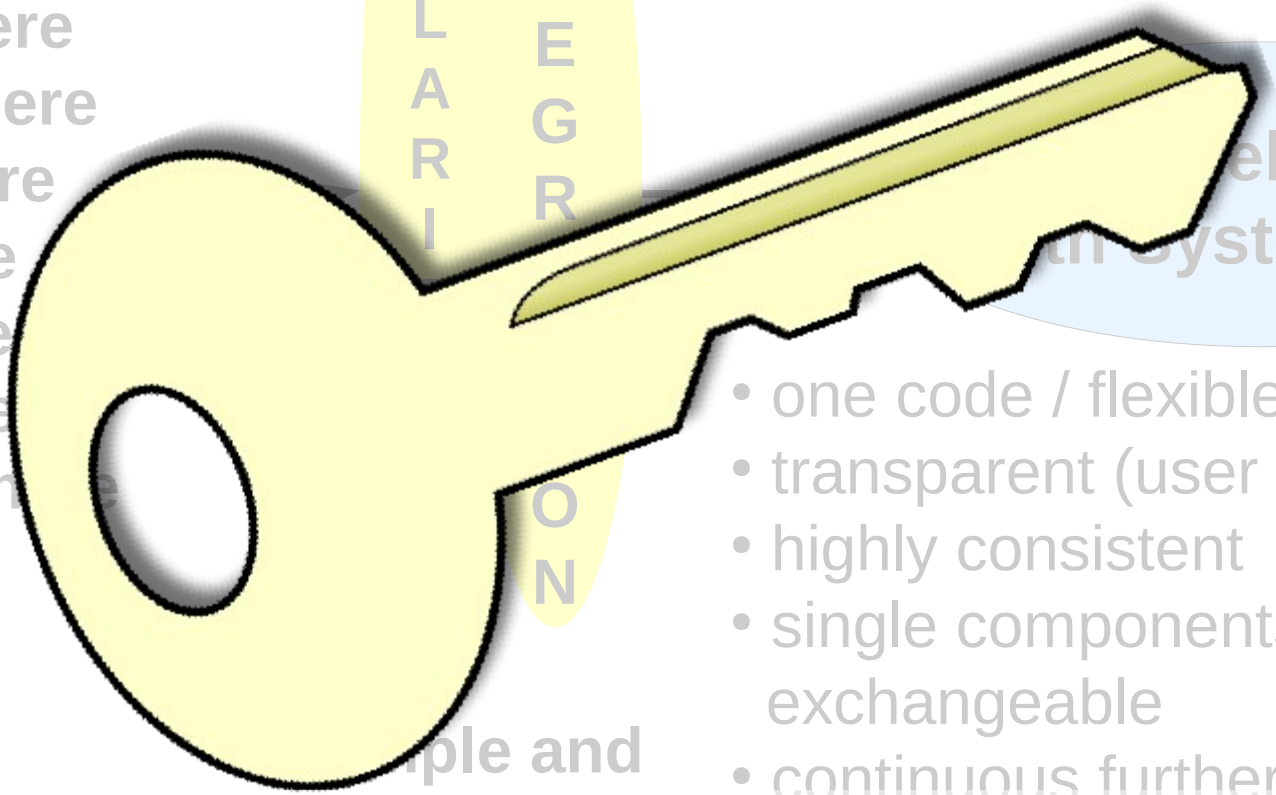

ehensive
th System Model

- one code / flexible complexity
- transparent (user friendly)
- highly consistent
- single components easily exchangeable
- continuous further development
- always "state of the art" and applicable for scientific purposes

ple and
efficient
structure

Standardisation

strict separation of
model-infrastructure[1)] and process-description

„generic“ submodels

process- / diagnostic submodels

→ organisation of code in a 4 – layer structure
→ consequent formalisation of „operator splitting“ concept
→ object-oriented approach (as far as possible in F95)
→ “low-level” standardisation
  → strict compliance with language standard (F95)
  → simple coding-standard

[1)] memory management, input/output, flow control, grid-transformations, ...

Concept 1: 4 – Layer Structure

"legacy model"
(GCM, LAM, ...)
„pinhole surgery"
OR
generic MESSy BM

Objects
(initial phase)

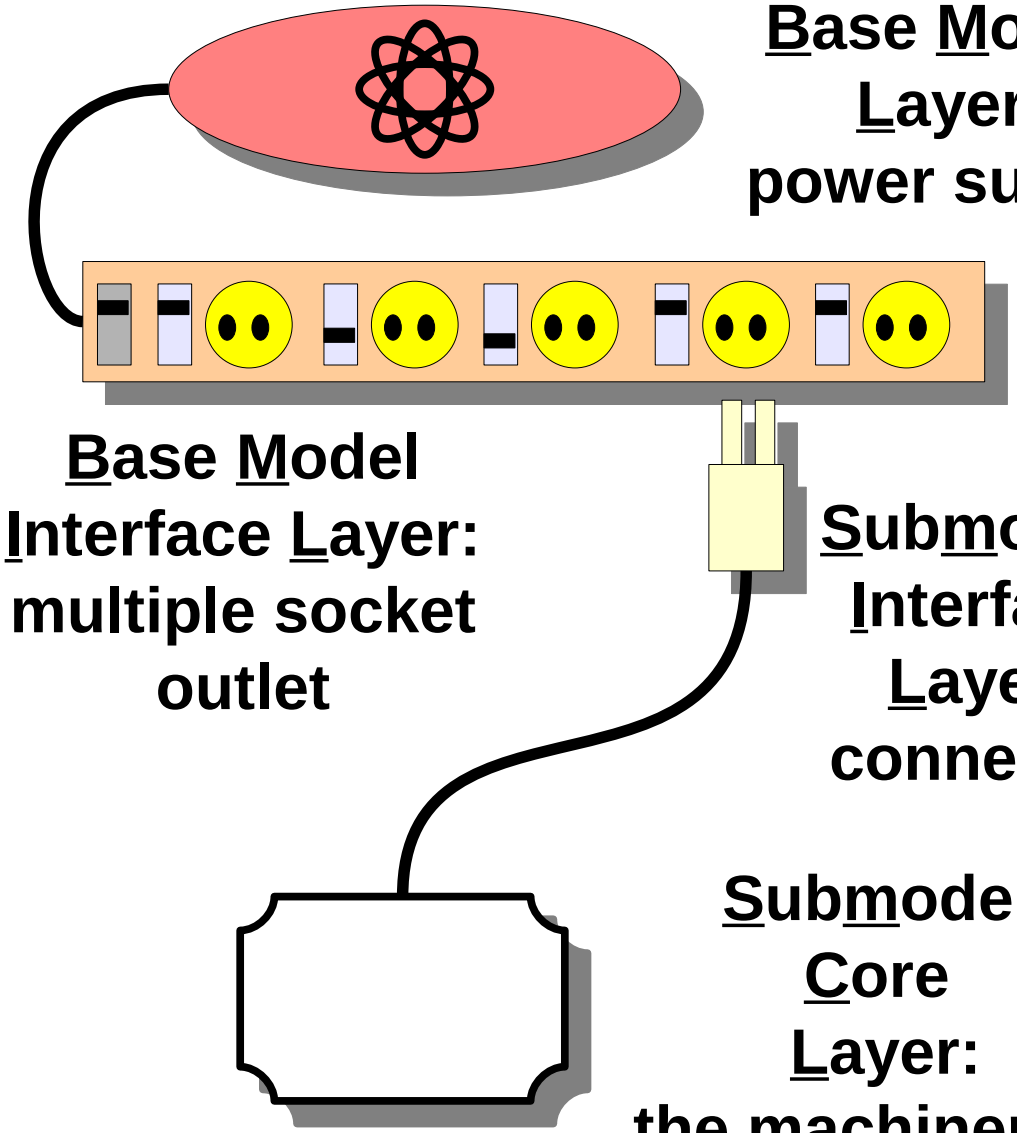

F95 „classic"
(arrays)

Standardisation on the lowest possible level ...

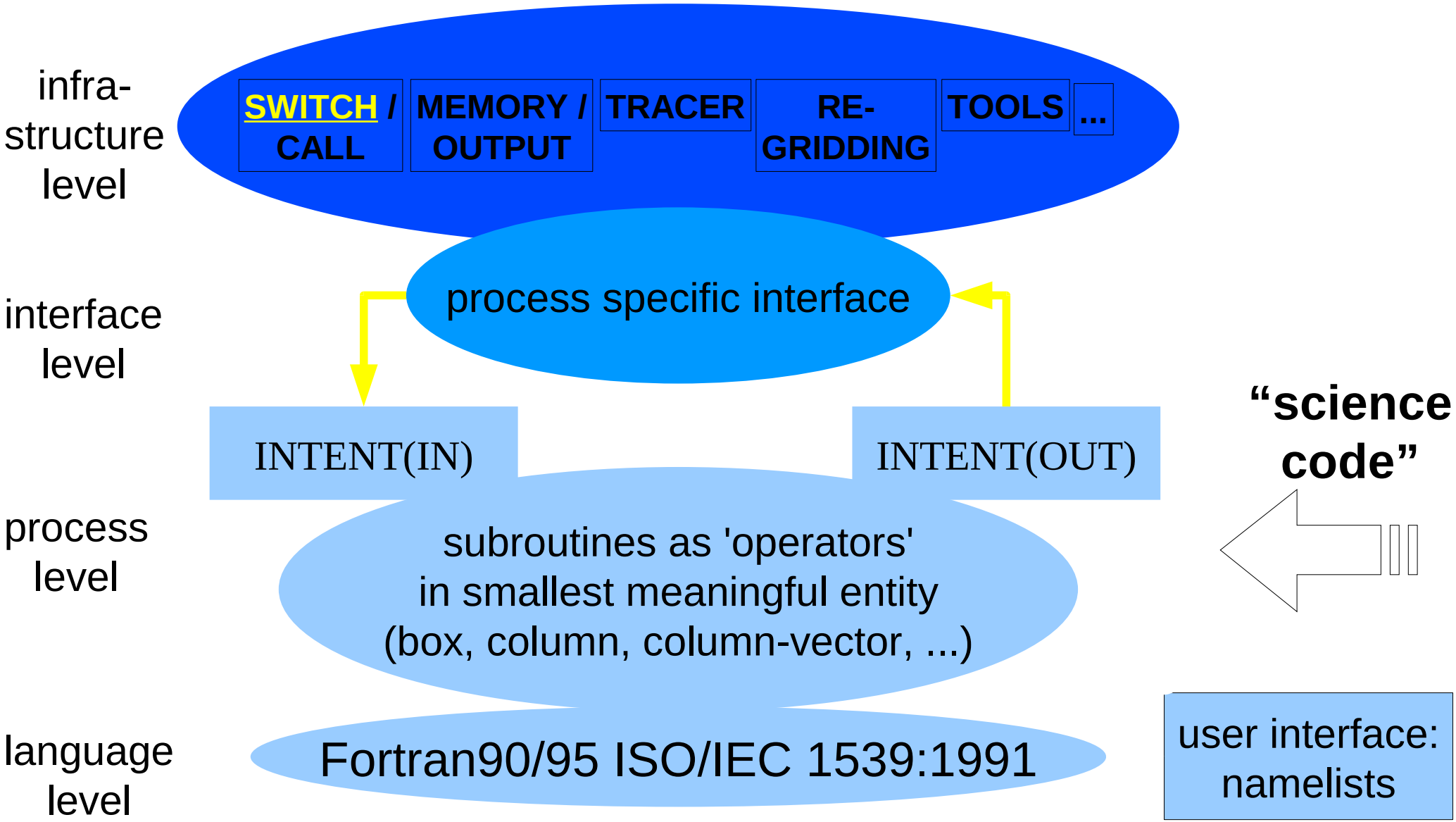

Standardisation on the lowest possible level ...

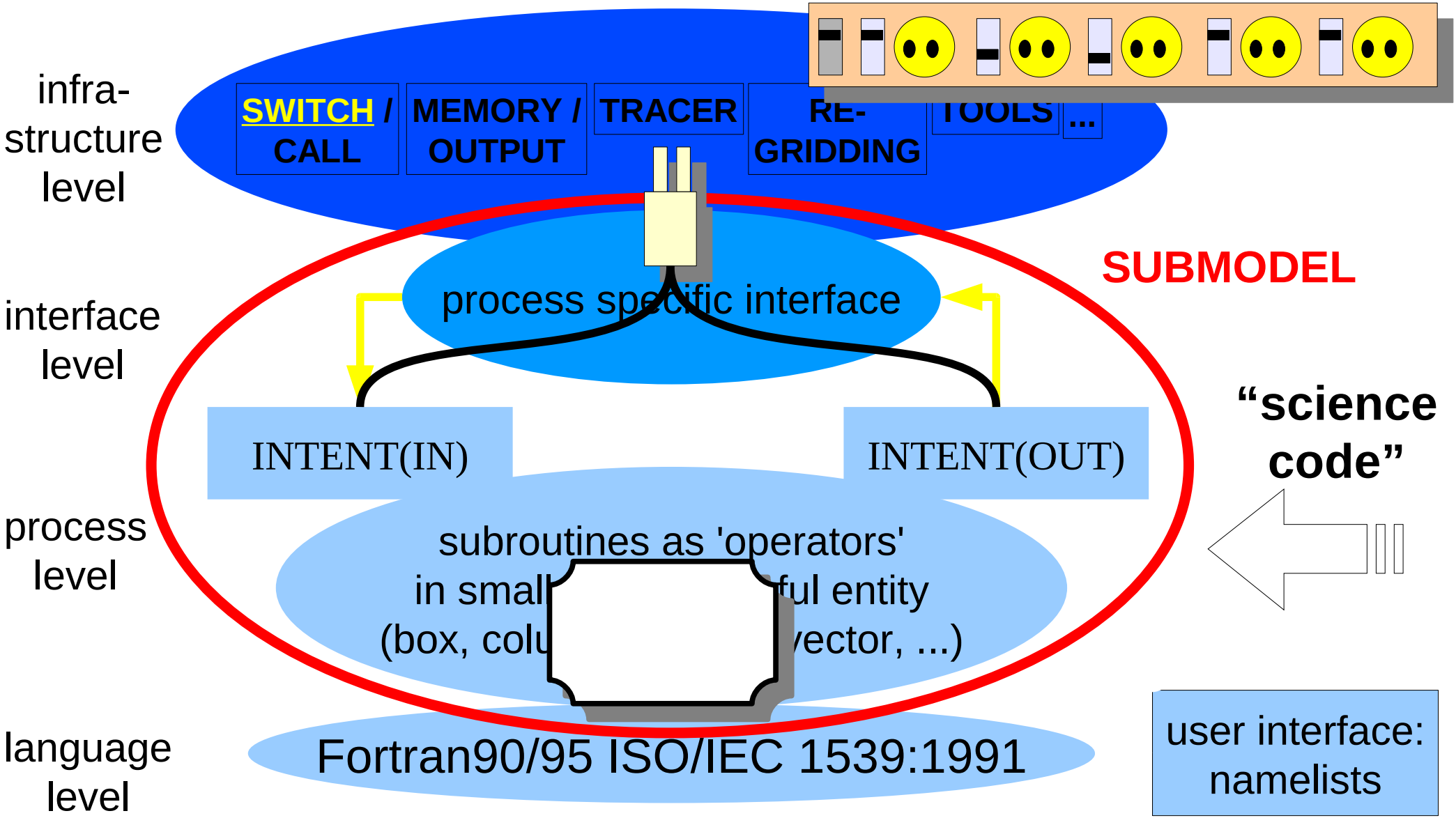

Concept 2: Operator Splitting

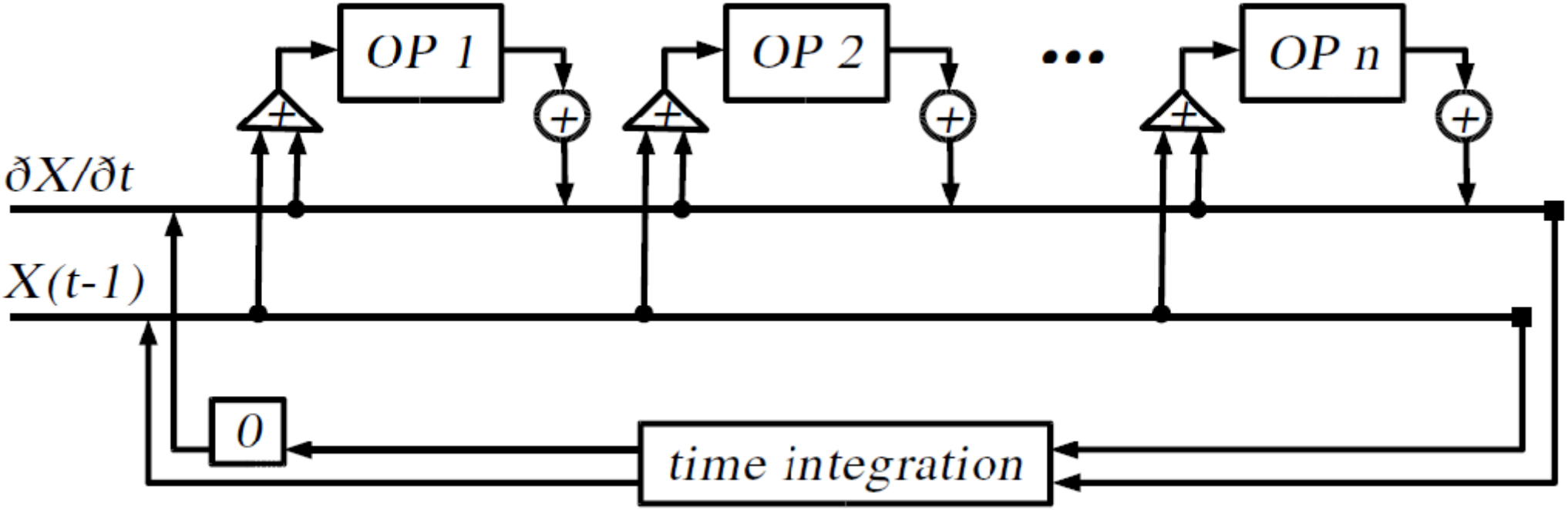

(Jöckel et al., ACP, 2005)

Concept 2: Operator Splitting

Example:
X = air temperature

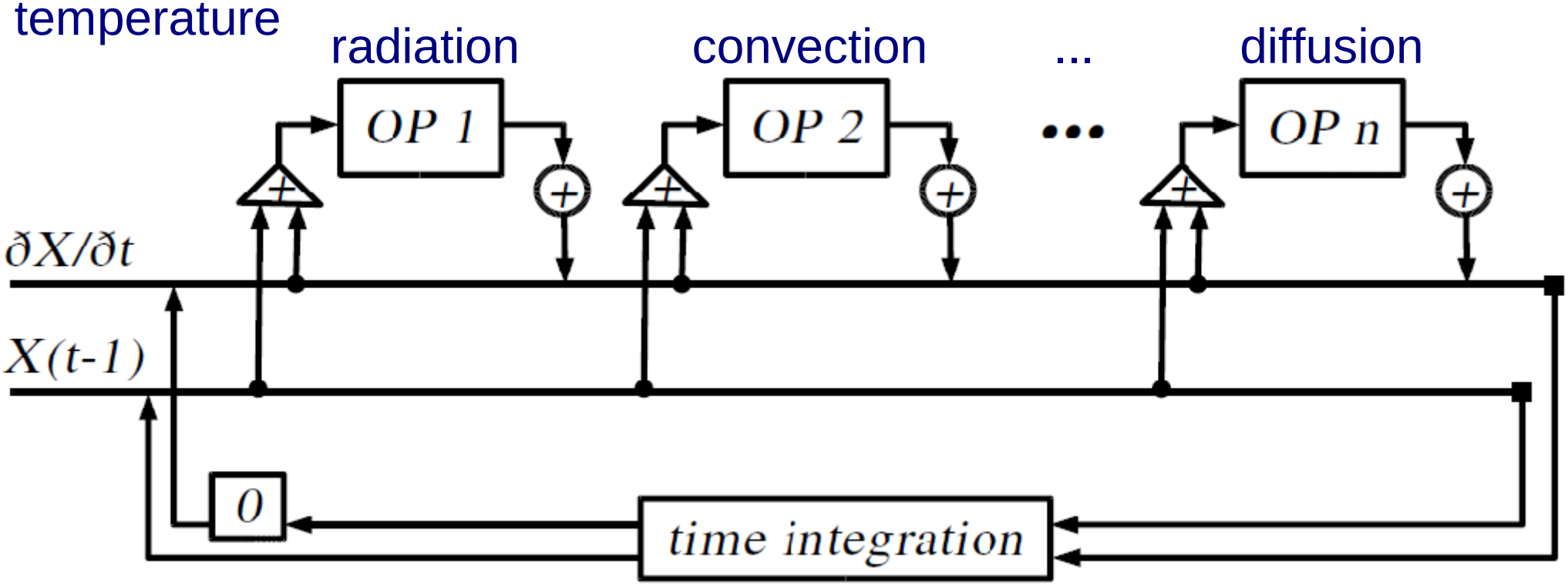

(Jöckel et al., ACP, 2005)

Concept 2: Operator Splitting

different numerical algorithms (discretisation, parallel decomposition, cache/vector blocking, ...)

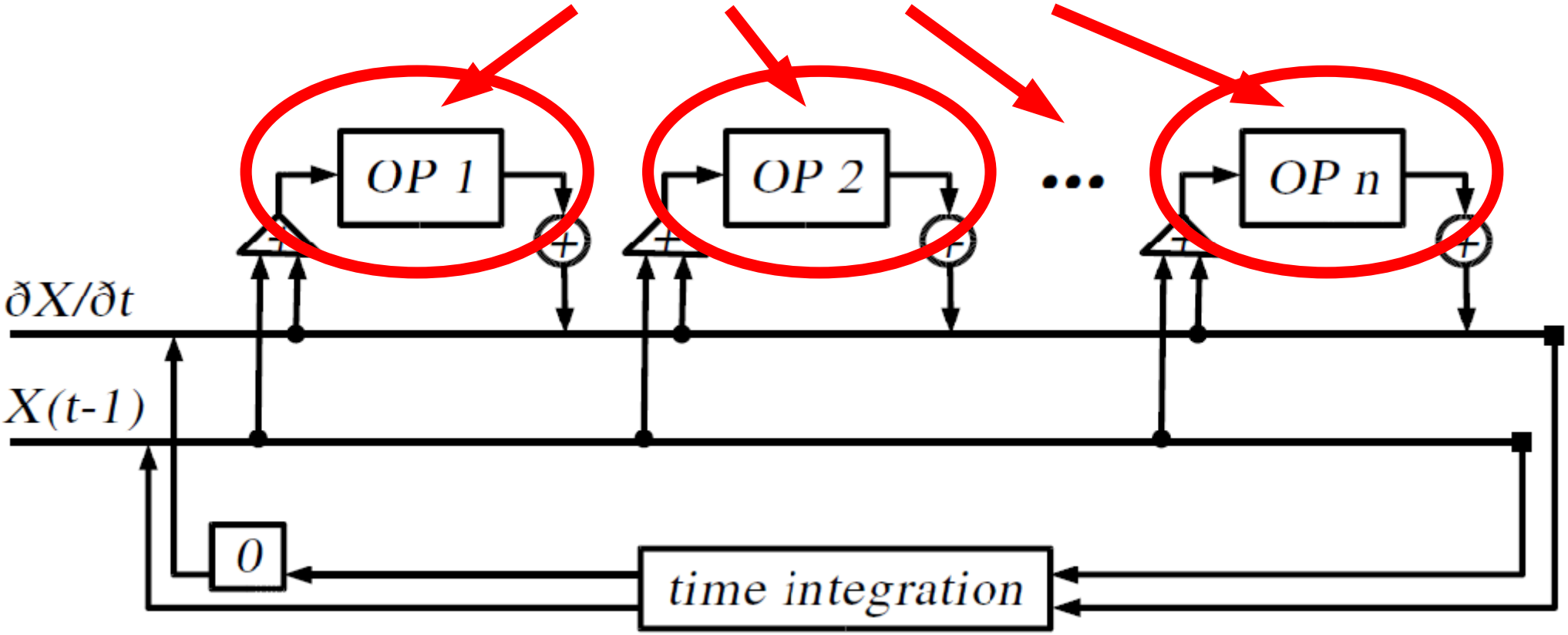

(Jöckel et al., ACP, 2005)

Concept 2: Operator Splitting

Example:

basic (dynamical) equations → coupled PDE system

reaction kinetics (chemistry) → coupled ODE system

spectral transform

Rosenbrock-3 (auto)

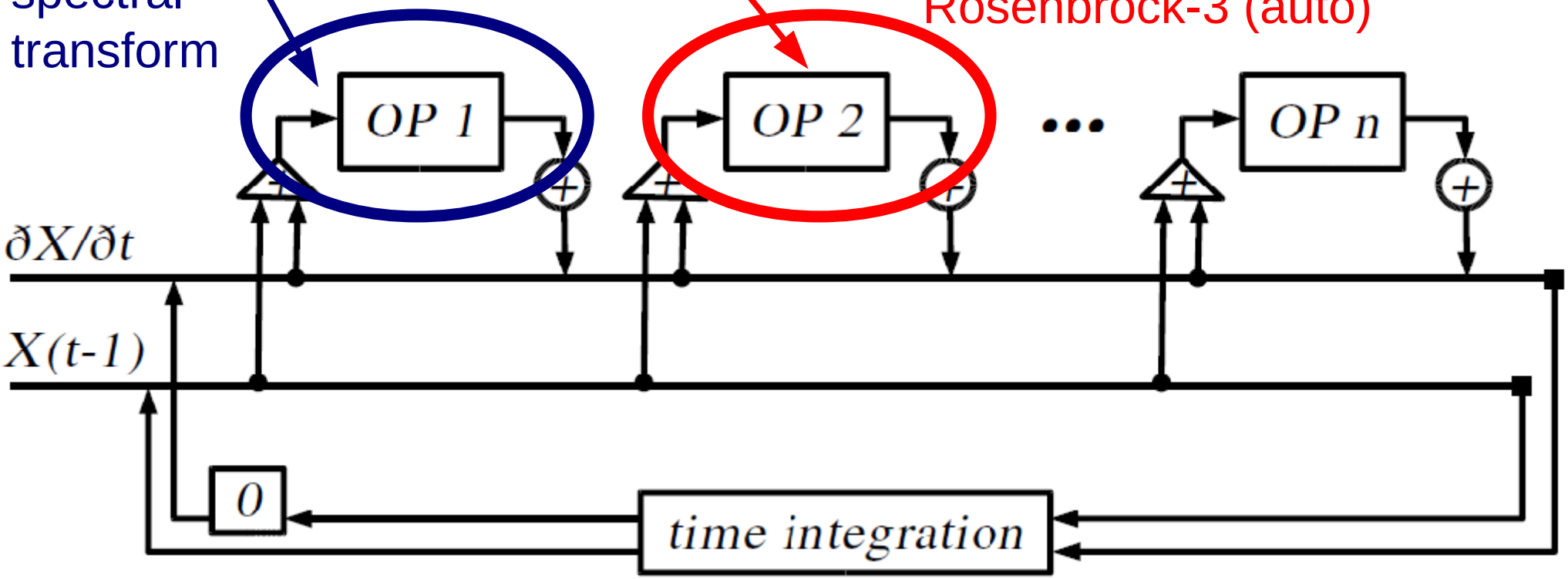

(Jöckel et al., ACP, 2005)

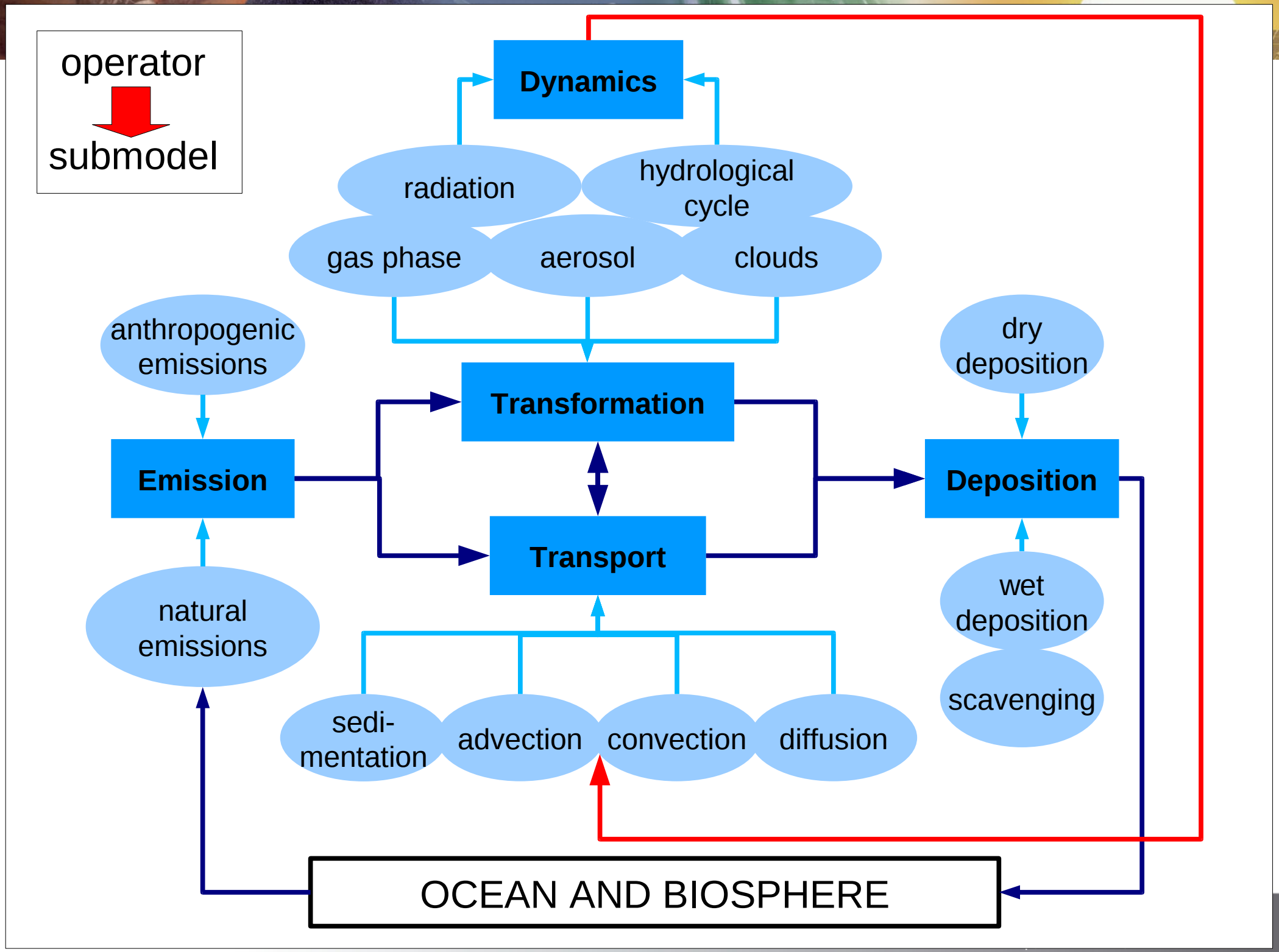
operator
submodel
Dynamics
radiation
hydrological cycle
gas phase
aerosol
clouds
anthropogenic emissions
dry deposition
Transformation
Emission
Deposition
Transport
natural emissions
wet deposition
scavenging
sedi-mentation
advection
convection
diffusion
OCEAN AND BIOSPHERE

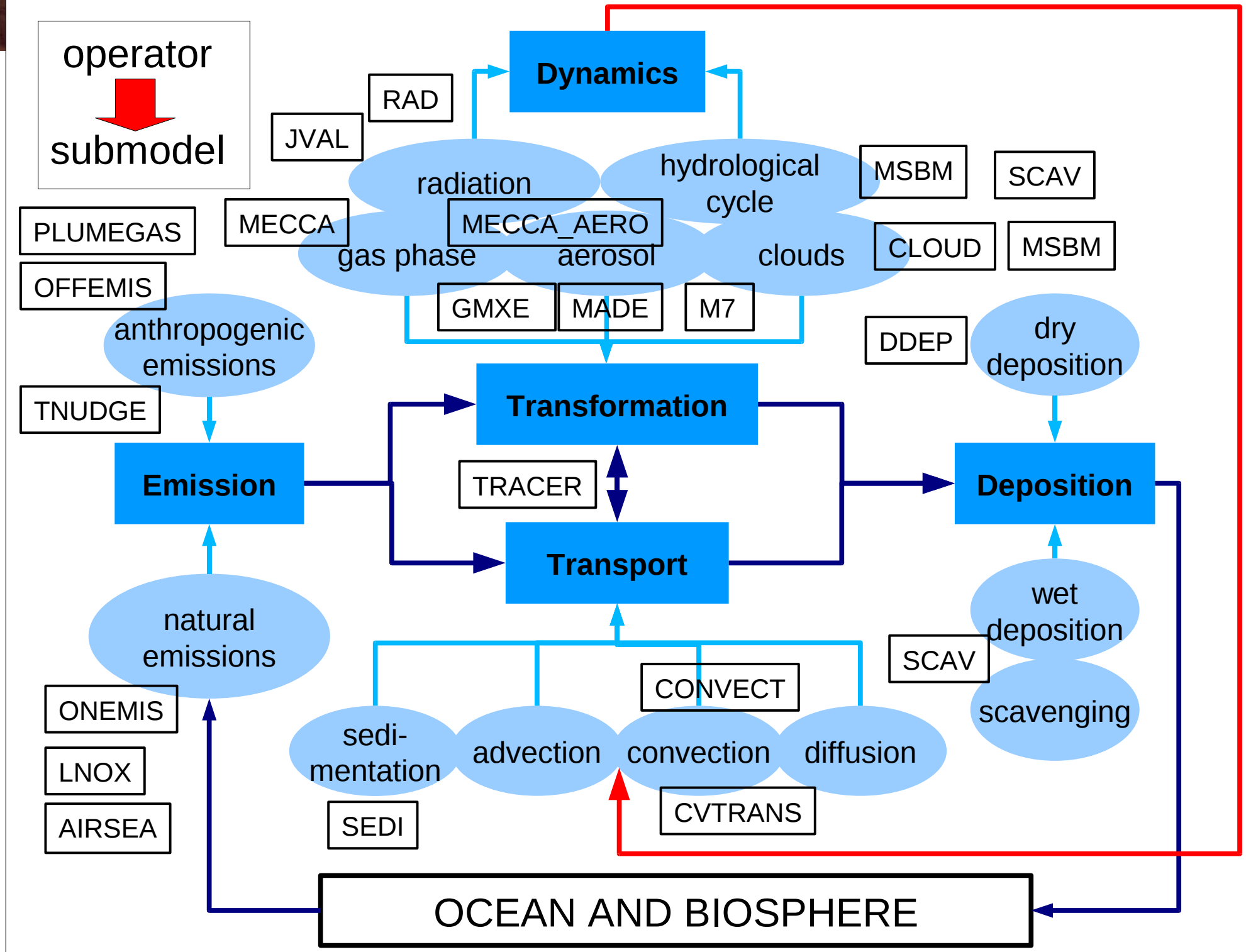
operator
submodel
Dynamics
RAD
JVAL
radiation
hydrological cycle
MSBM
SCAV
PLUMEGAS
MECCA
MECCA_AERO
gas phase
aerosol
clouds
CLOUD
MSBM
OFFEMIS
GMXE
MADE
M7
anthropogenic emissions
DDEP
dry deposition
TNUDGE
Transformation
Emission
TRACER
Deposition
Transport
natural emissions
wet deposition
SCAV
scavenging
CONVECT
ONEMIS
sedi-mentation
advection
convection
diffusion
LNOX
AIRSEA
SEDI
CVTRANS
OCEAN AND BIOSPHERE

Concept 3: Objects

Fortran variable (array)

"channel object"
(nested F95 structures)
- data (pointer to memory)
- geometry + parallel decomp. (*representation*)
- meta-data (*attributes*)
- output (incl. simple statistics w.r.t. time)
- restart facility
- ...

BML

BMIL

SMIL

SMCL

objects

pointer / array ← "pinhole surgery" !

pointer / array ← performance !

Object oriented approach: The generic submodels

- SWITCH/CONTROL: central submodel management
- CHANNEL: data exchange (coupling) between processes and data export
- TRACER: coupling between processes via prognostic variables
  (e.g., emission -> kinetics -> advection -> deposition)
- TIMER: time control, event management
- TOOLS: tools shared by various submodels
- NCREGRID: automatic re-discretisation of initial- and boundary conditions during import
- TENDENCY: time integration & process analysis
- QTIMER: optimum job-scheduling & performance analysis
- ...

Achievements reached with

Achievement 1: plug & play / code sharing

Bridging process & chemistry climate modeling

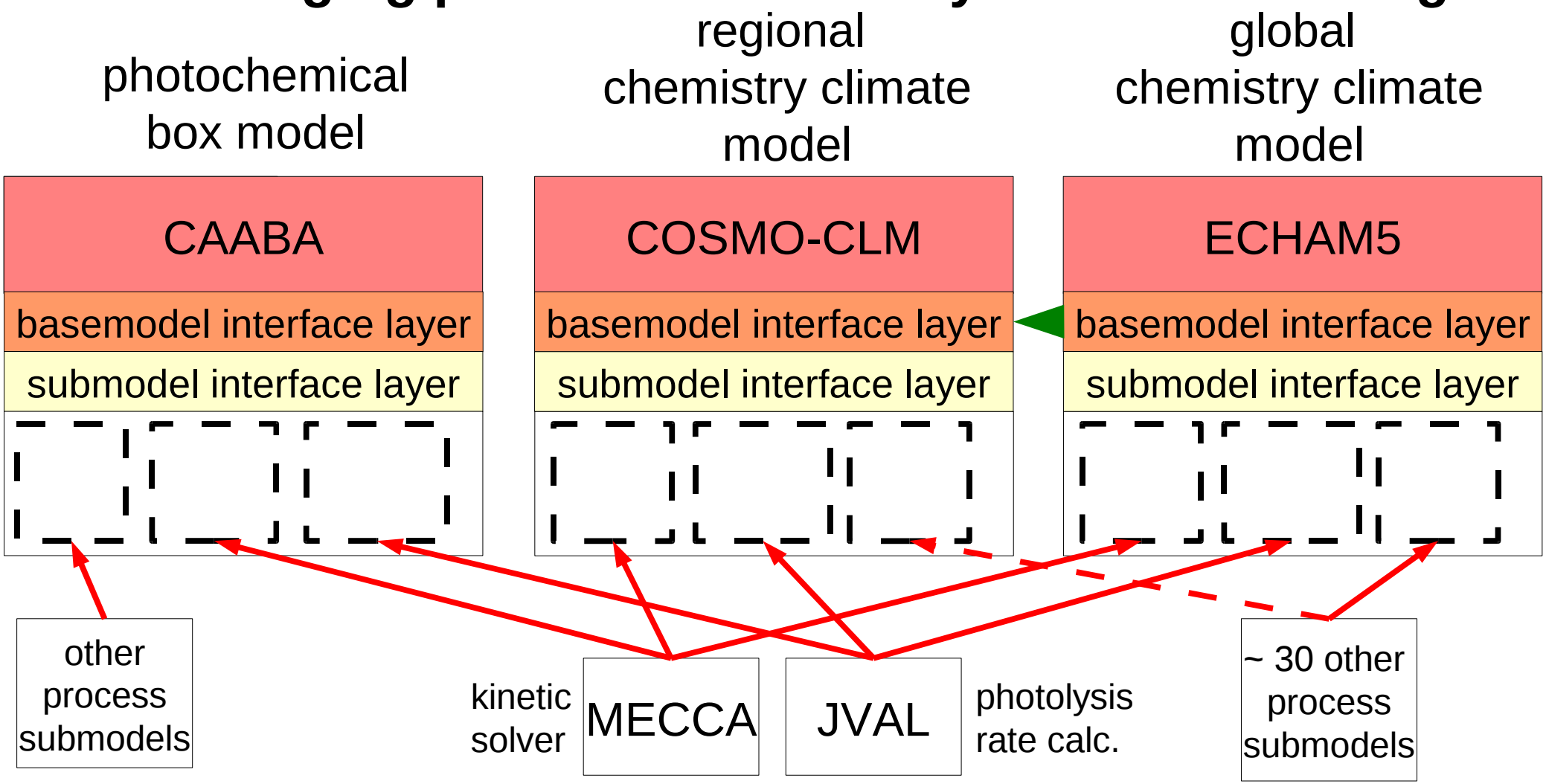

Achievement 2: coexistence of alternatives

uncertainty w.r.t. process formulation

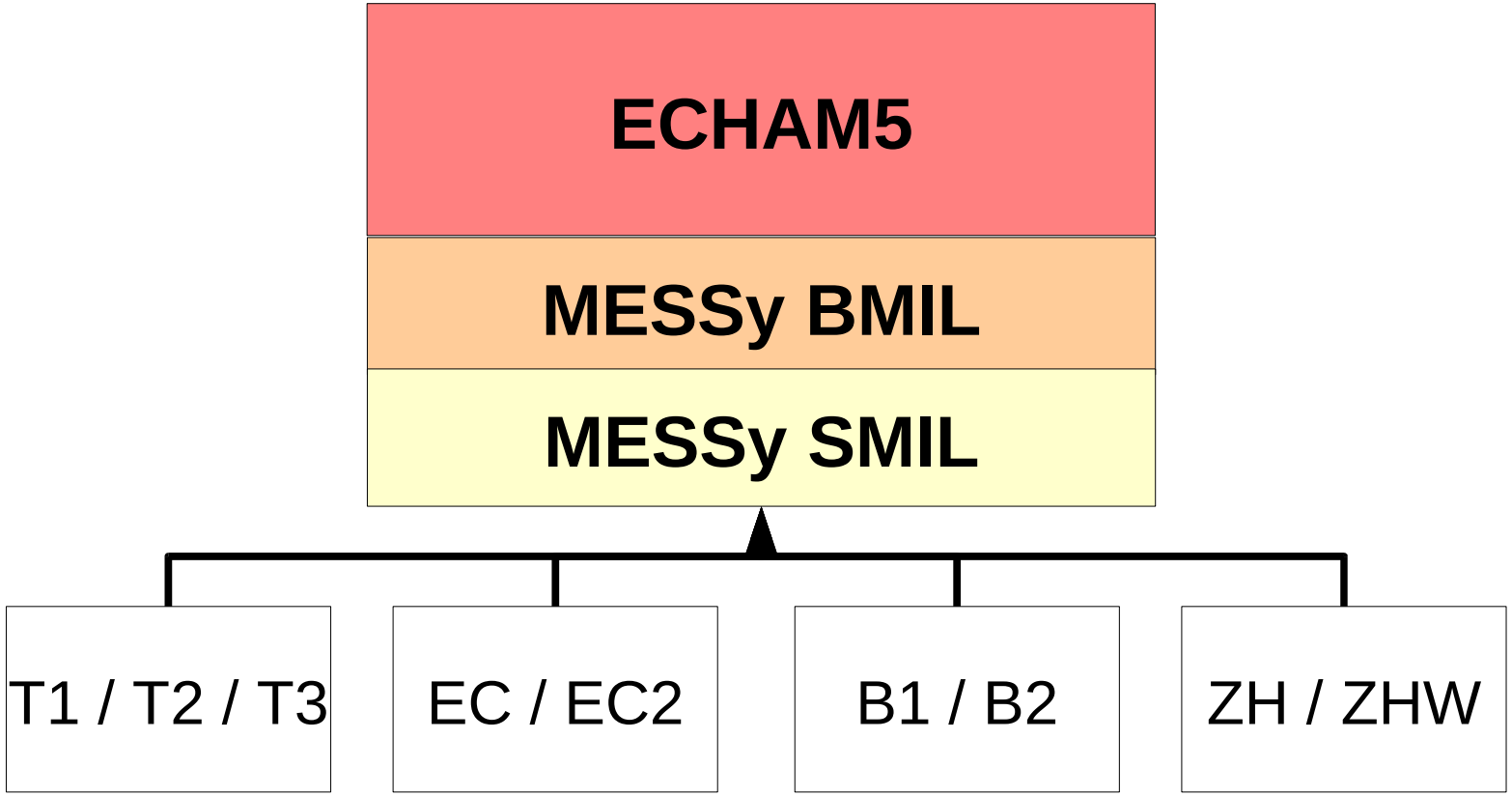

4 different convection schemes

average precipitation [mm/day]

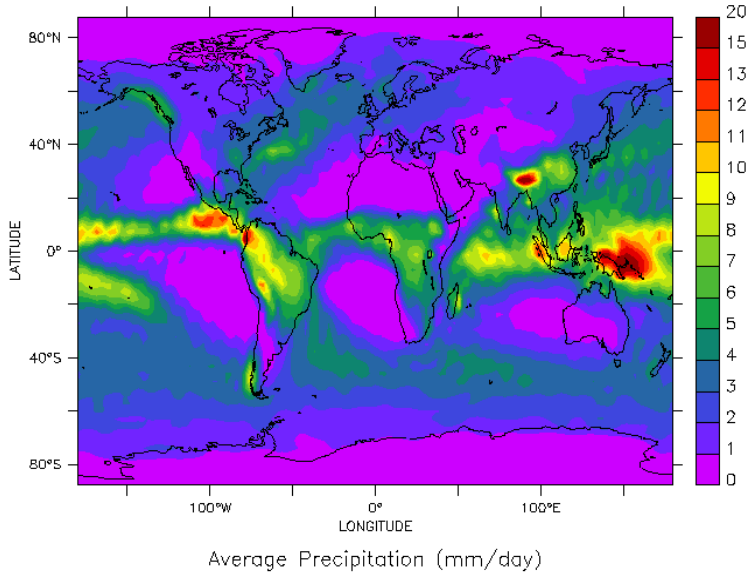

Tiedtke – Nordeng

GPCP (=obs.)

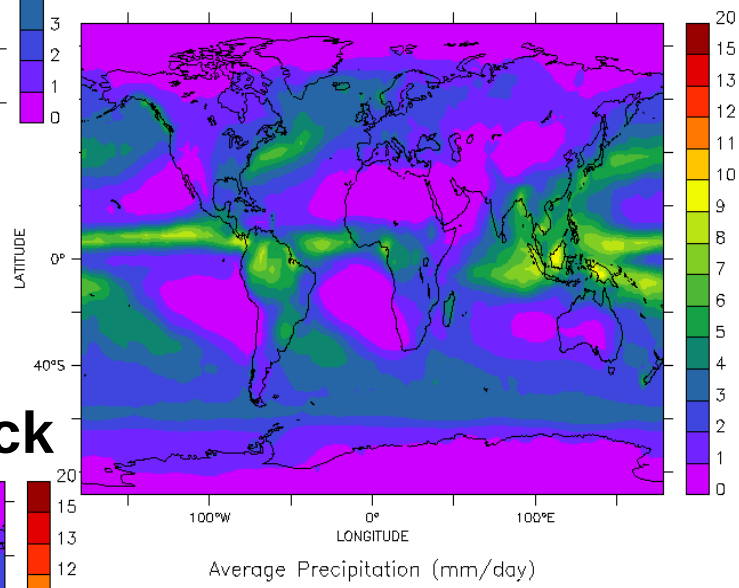

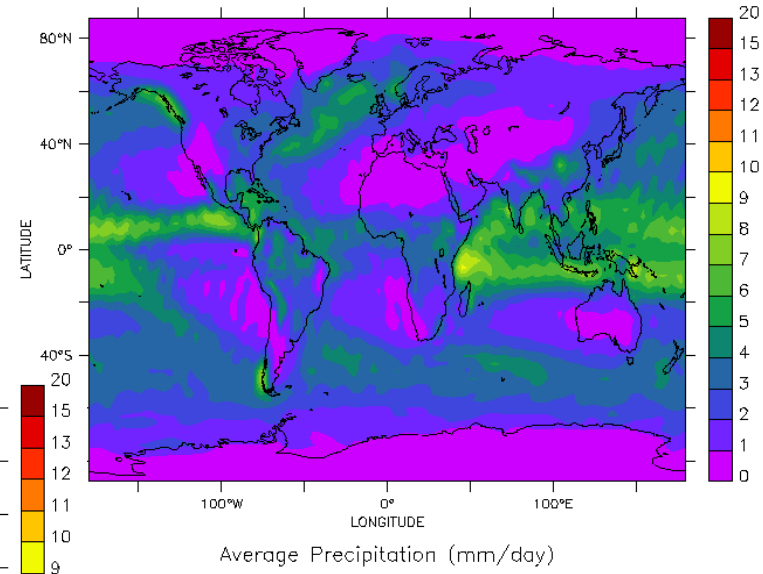

ECMWF

Zhang /McFarlane / Hack

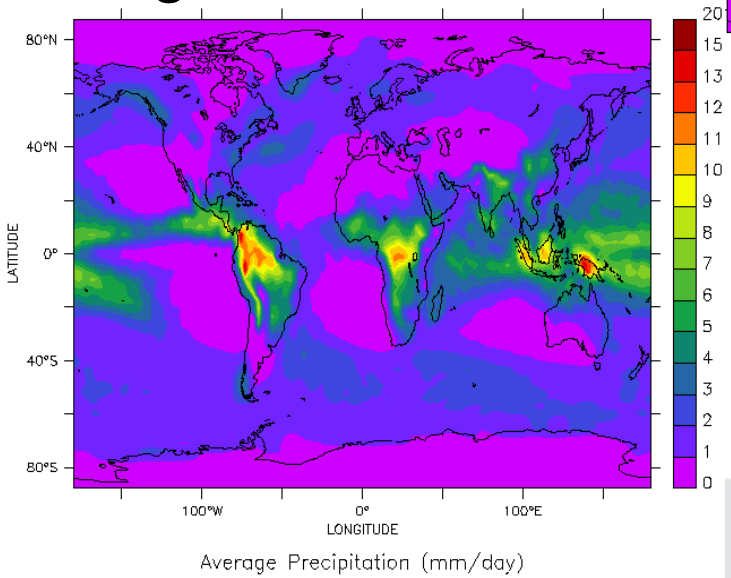

Bechtold

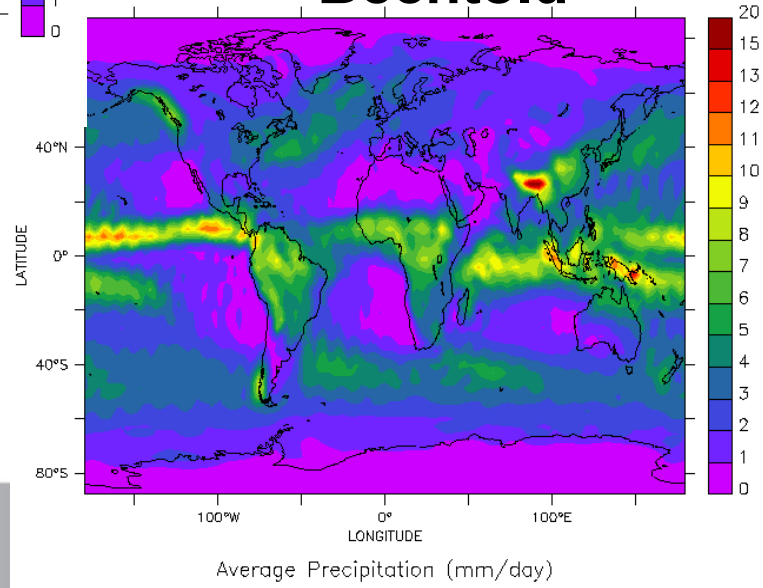

(H. Tost, 2006)

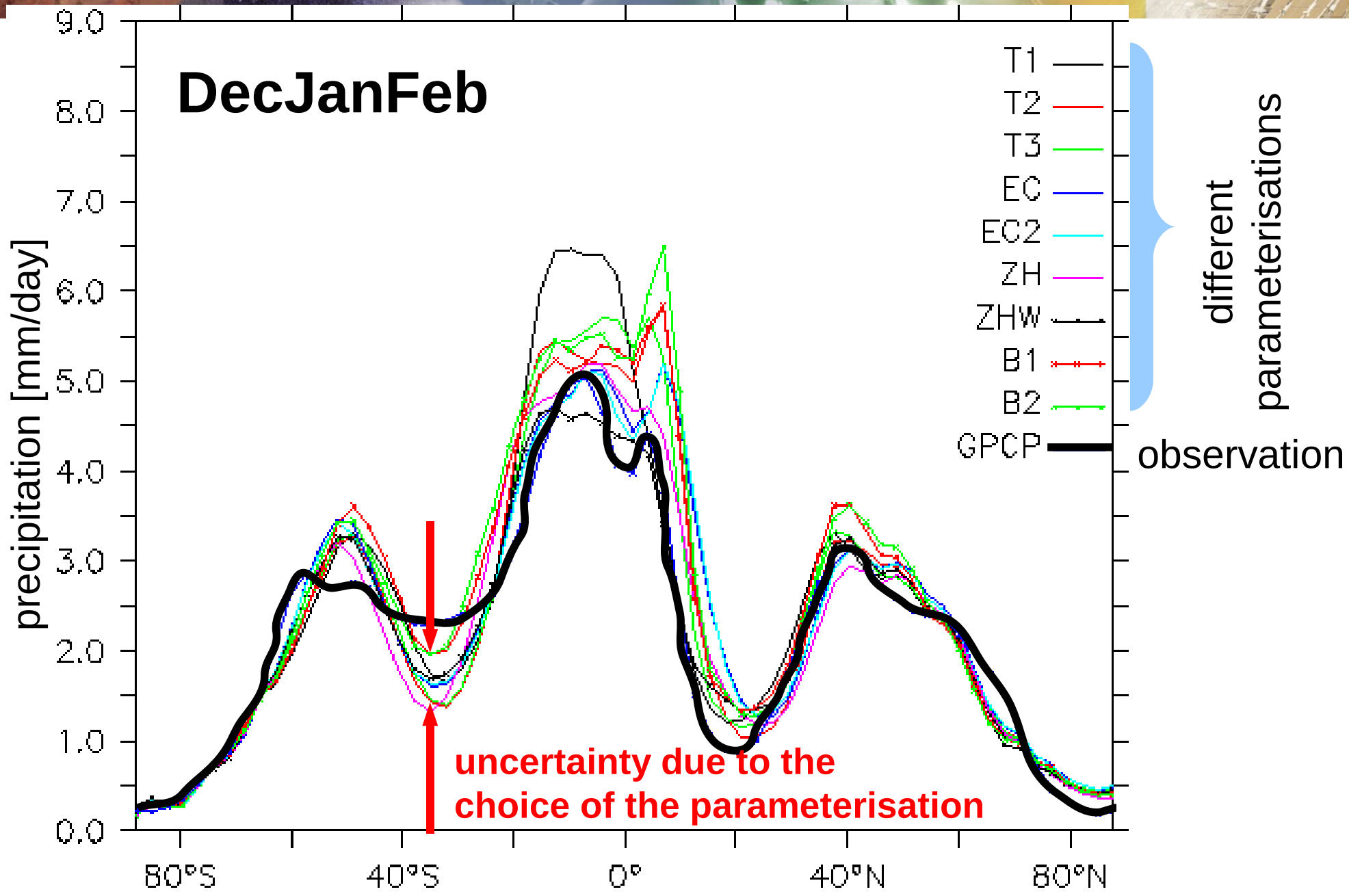
DecJanFeb
precipitation [mm/day]
9.0
8.0
7.0
6.0
5.0
4.0
3.0
2.0
1.0
0.0
80°S
40°S
0°
40°N
80°N
T1
T2
T3
EC
EC2
ZH
ZHW
B1
B2
GPCP
different parameterisations
observation
uncertainty due to the choice of the parameterisation

ECHAM5
MESSy
OFFEMIS

prescribed
oceanic
emissions

Achievement 3:
increasing consistency (step by step)

emission flux consistent with	
wind speed	-
salinity	-
ocean circulation	-

ECHAM5	ECHAM5	
MESSy	MESSy	
OFFEMIS	IMPORT	AIRSEA
prescribed oceanic **emissions**	prescribed oceanic **concen-trations**	explicit calculation of **air – sea exchange**

emission flux consistent with		
wind speed	-	+
salinity	-	-/+
ocean circulation	-	-

ECHAM5	ECHAM5		MPIOM
MESSy	MESSy		
OFFEMIS	IMPORT	AIRSEA	HAMOCC
prescribed oceanic **emissions**	prescribed oceanic **concen-trations**	explicit calculation of **air – sea exchange**	explicit calculation of **oceanic concen-trations**

emission flux consistent with			
wind speed	-	+	+
salinity	-	-/+	+
ocean circulation	-	-	+

Some examples of

developments

Example 1: internal coupling **versus** indirect external coupling

of an Atmosphere – Ocean System (domain coupling)

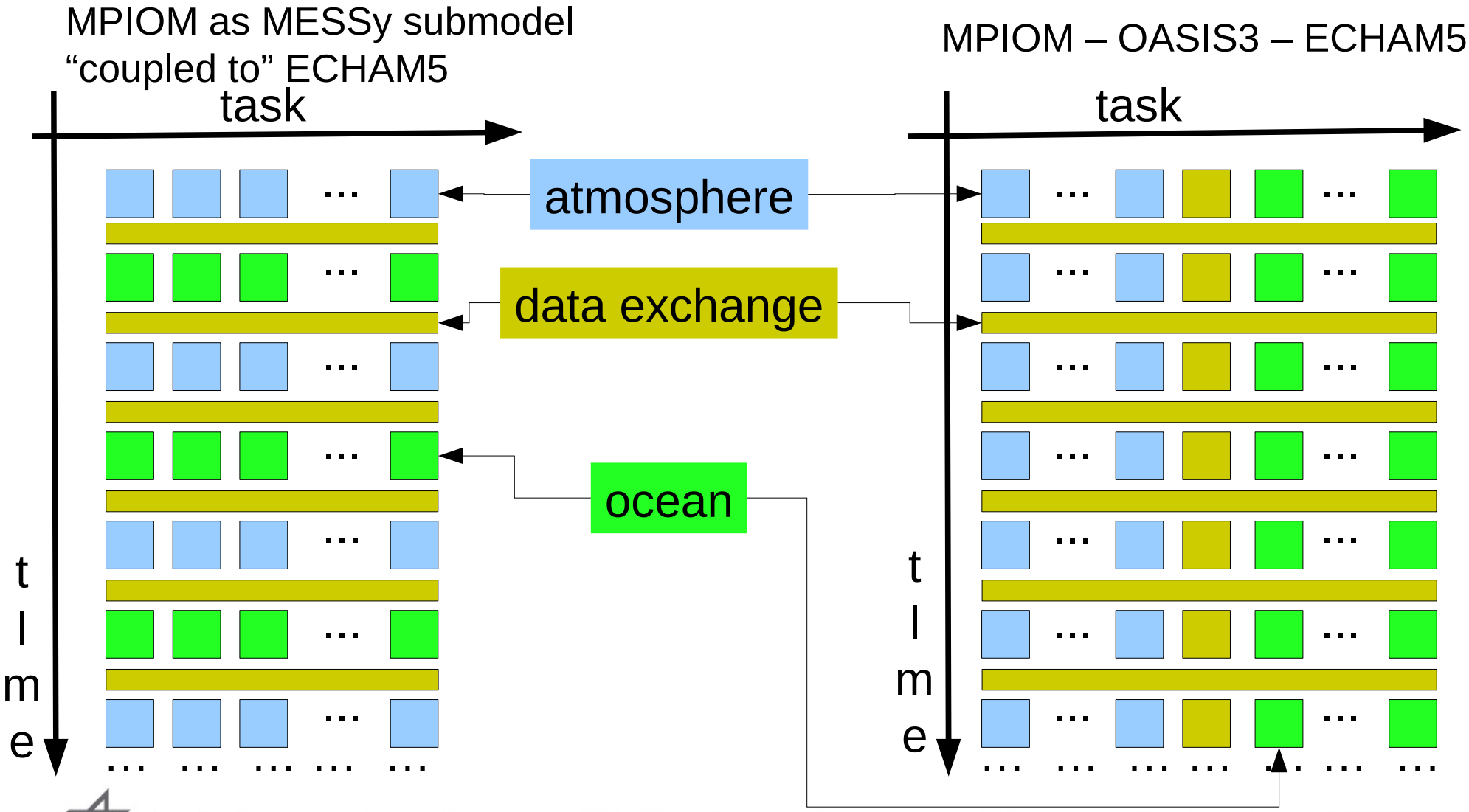

Example 1: internal coupling **versus** indirect external coupling

of an Atmosphere – Ocean System (domain coupling)

Processor ID # for 4 x 4 decomposition

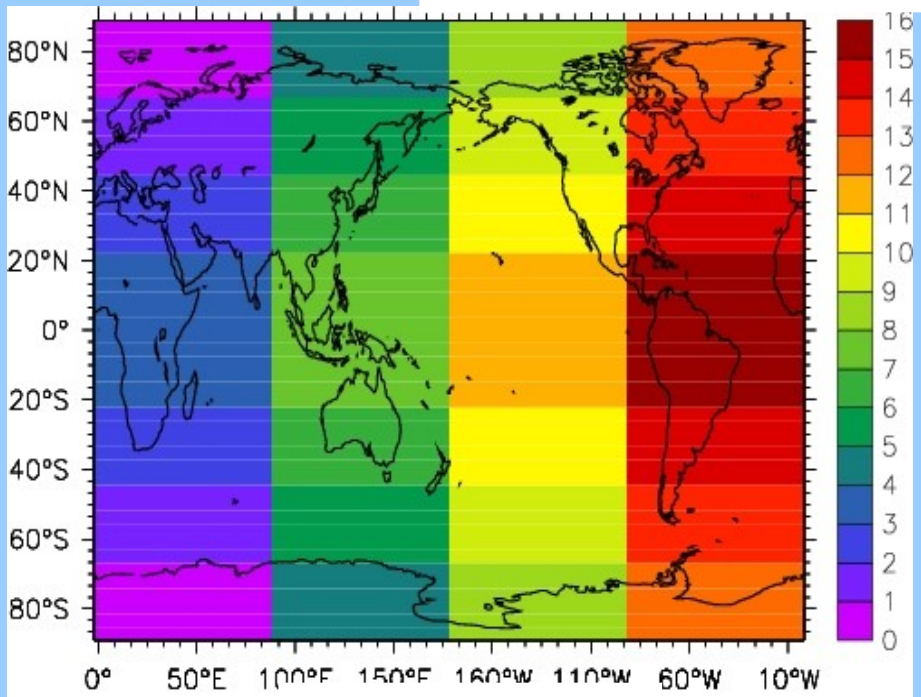

Atmosphere

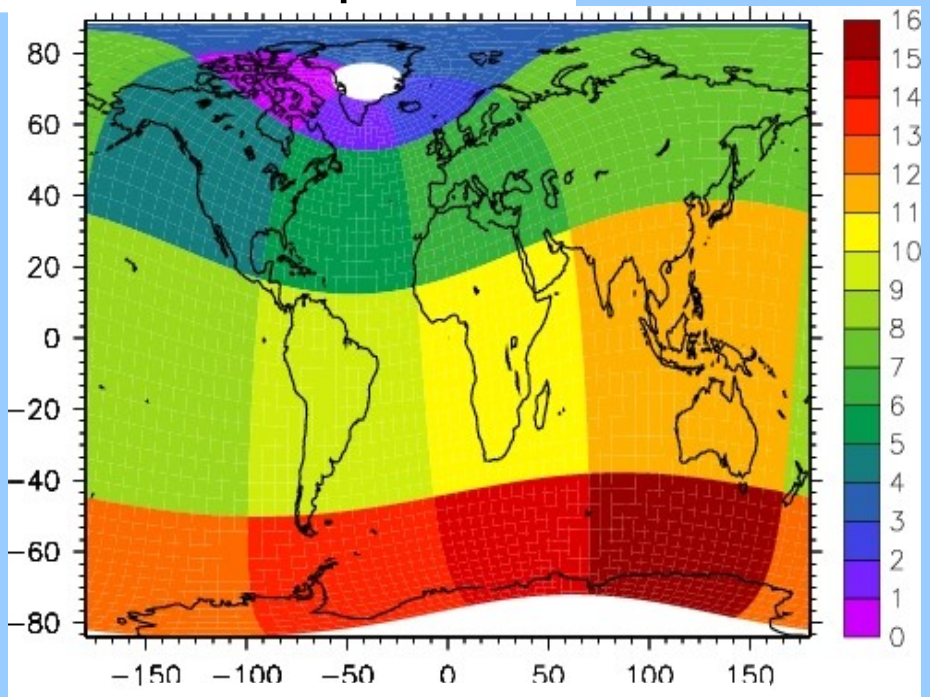

Ocean (rotated grid)

Example 1: internal coupling **versus** indirect external coupling

of an Atmosphere – Ocean System (domain coupling)

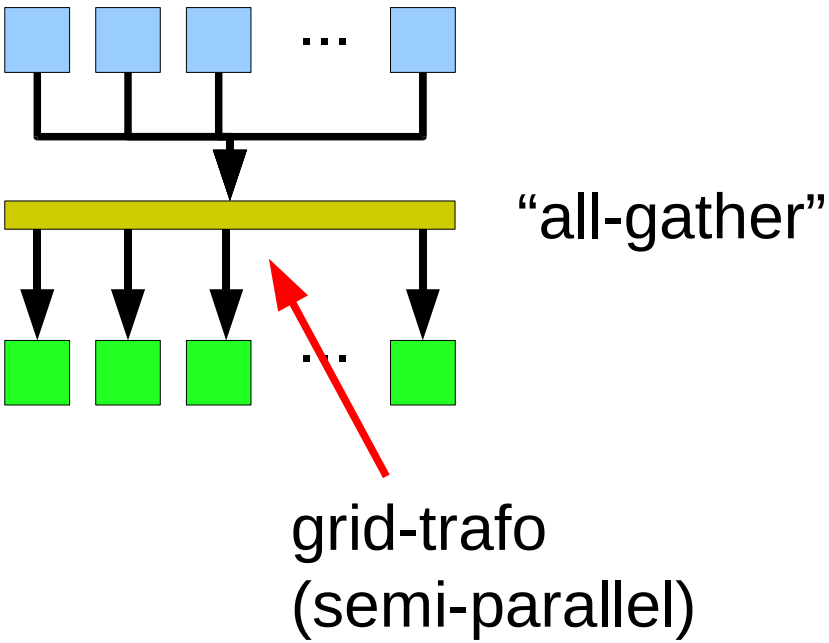

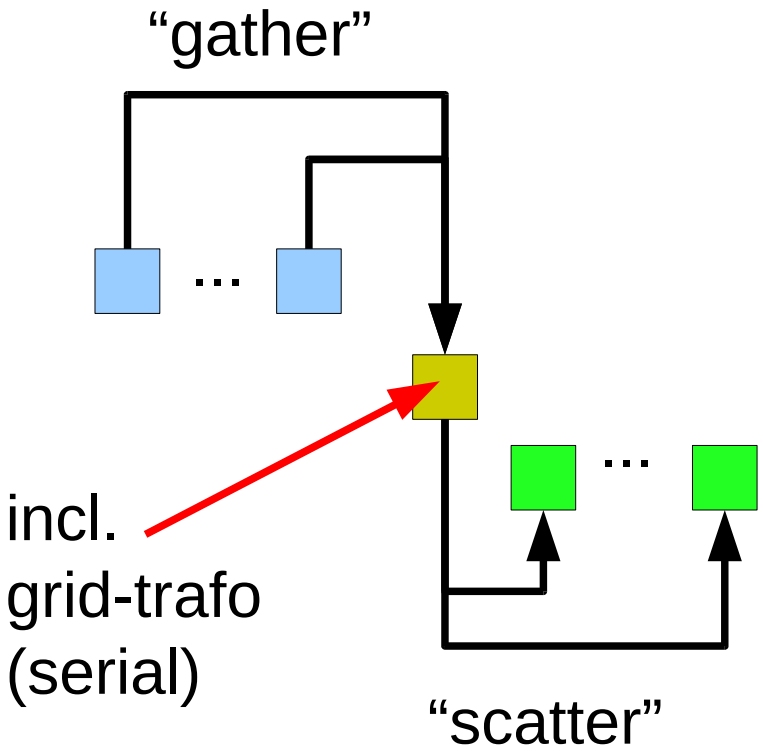

Example 1: Performance (seconds per simulated month)

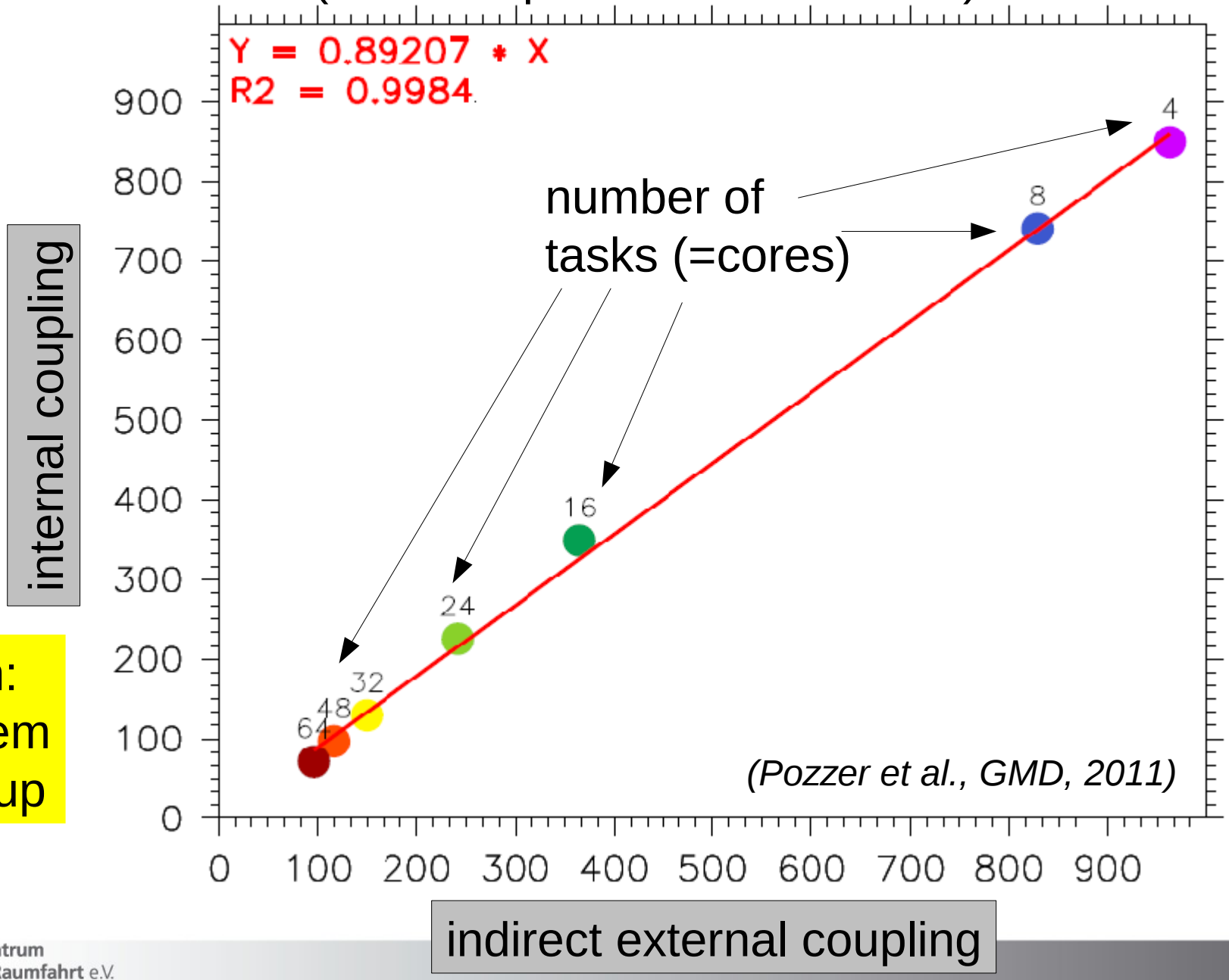

depends on:
- HPC system
- model setup

Example 2: direct external coupling

MECO(n): MESSy-fied ECHAM and COSMO n-times nested

- 1-way on-line nested global-regional atmospheric model system
- multiple instances possible due to client – server architecture of MMD ...

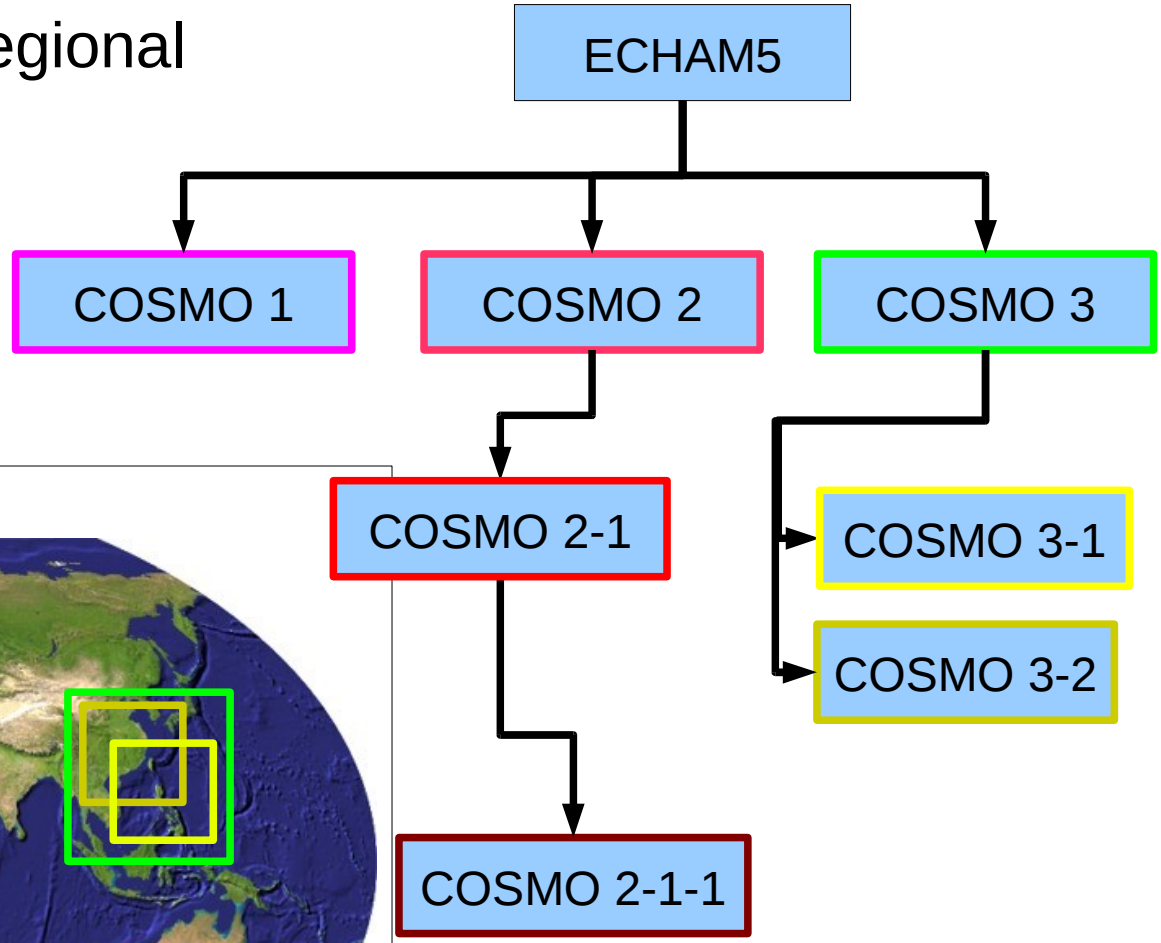

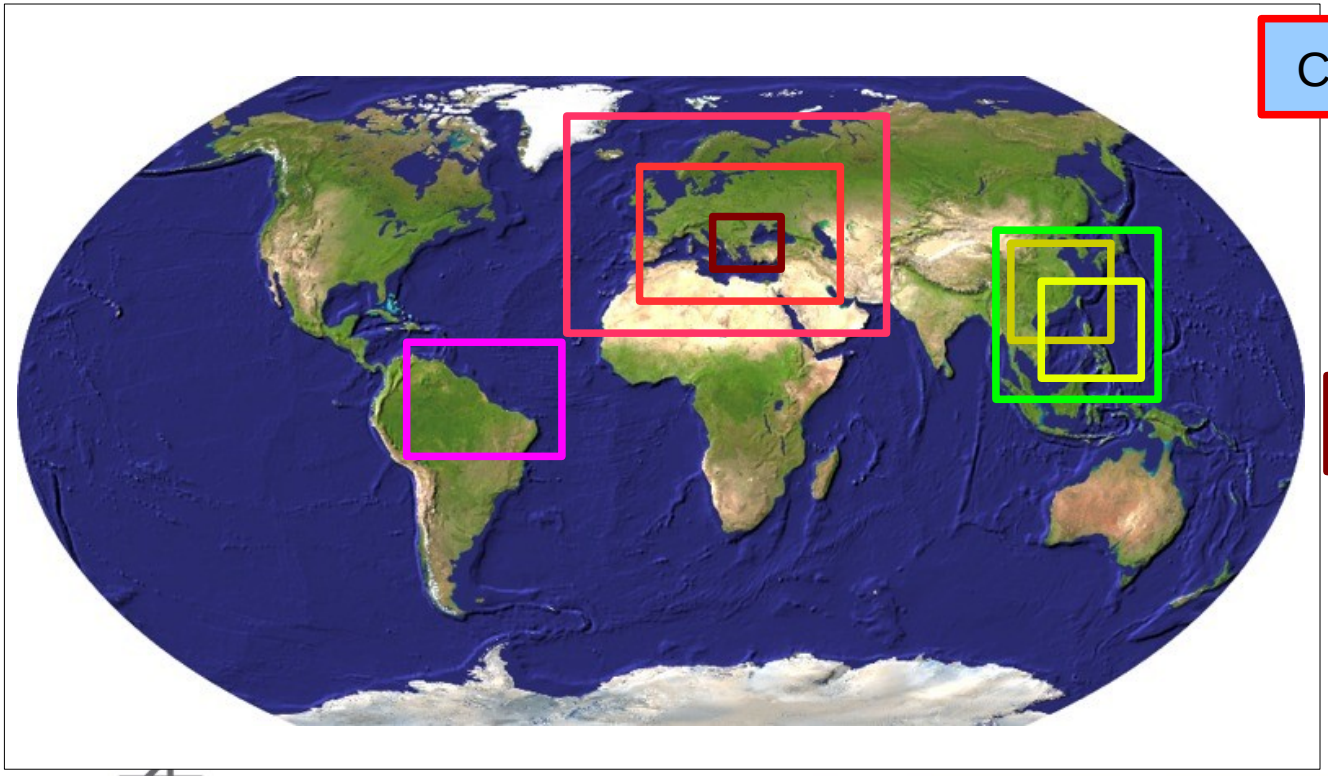

(*Kerkweg & Jöckel, GMD, 2012a,b*)
(*Hofmann et al., GMD, 2012*)

MECO(2) simulation of **Eyjafjallajokull eruption plume 2010**

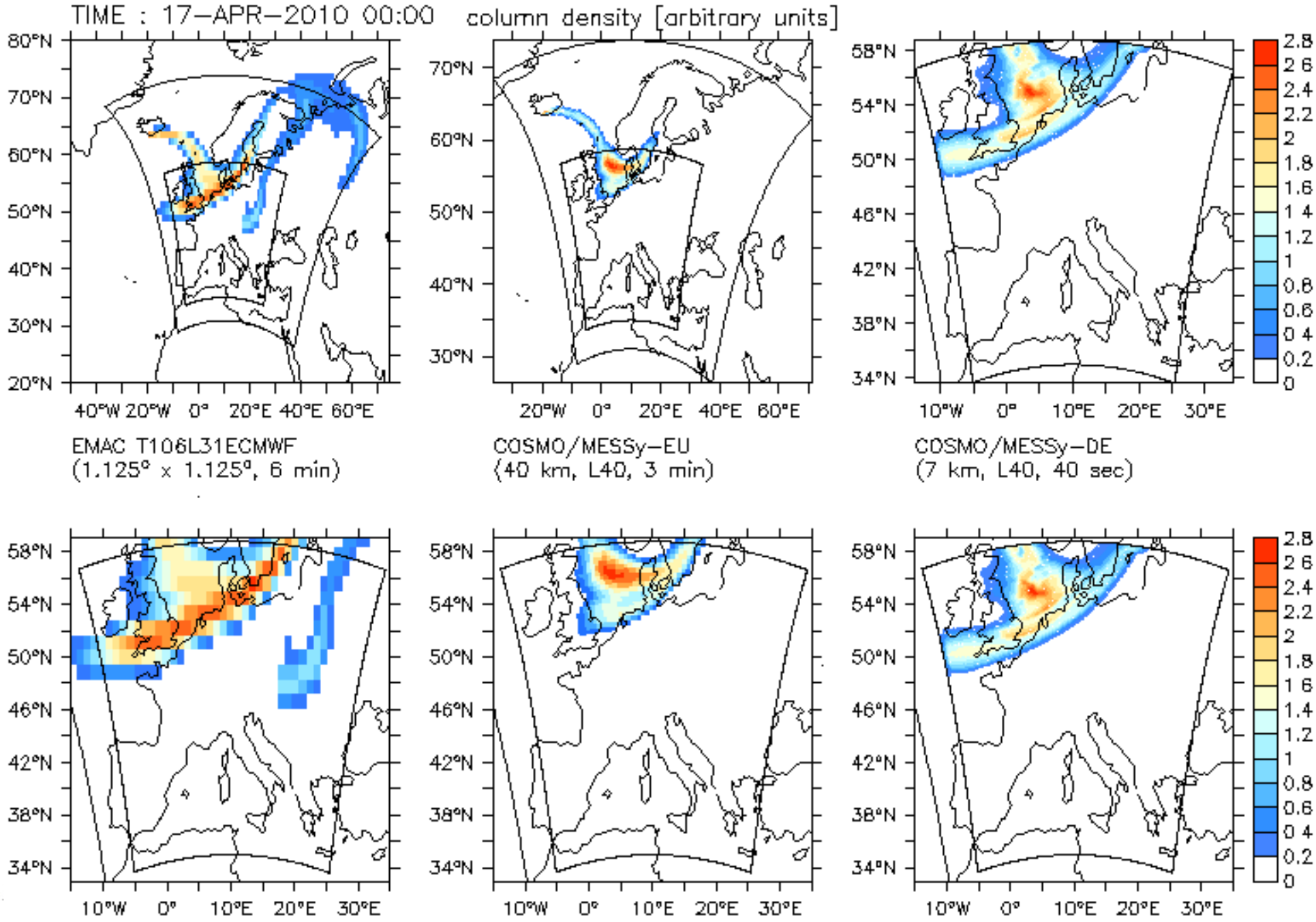

(c) Patrick Joeckel, DLR, Aug 2011

Example 2: On-line nesting: an alternative way to higher resolution

MMD-Server
(ECHAM5 or COSMO)

MMD-Client
(COSMO)

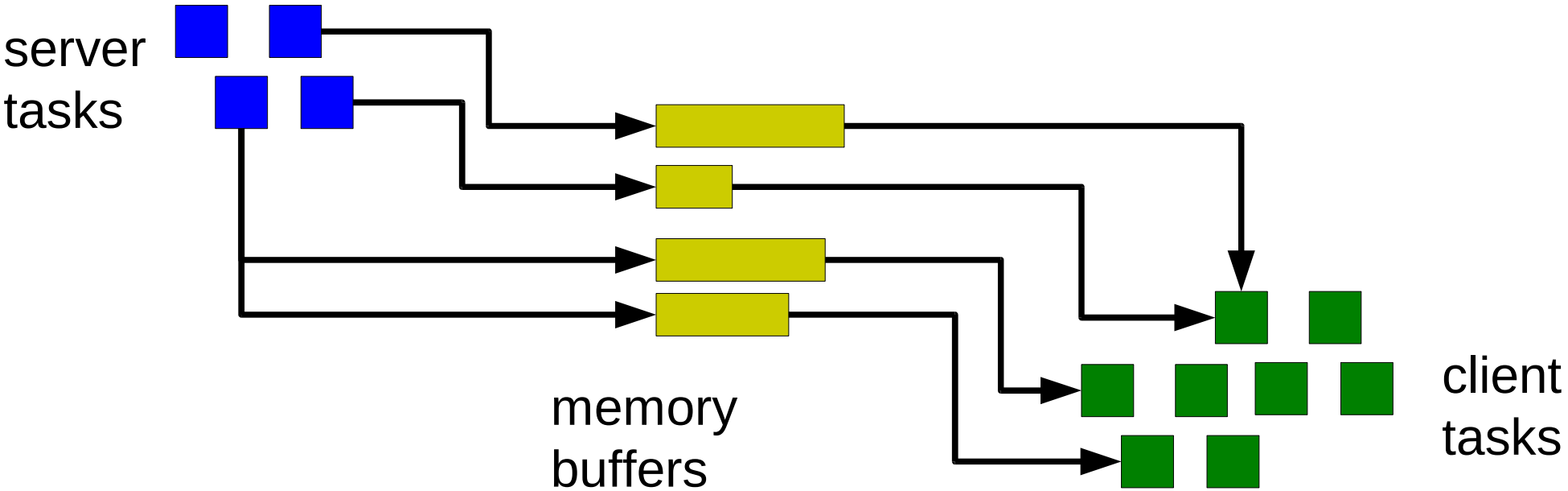

MPI based, single sided “point-to-point” communication between c&s tasks with overlapping grids

Example 2: On-line nesting: an alternative way to higher resolution

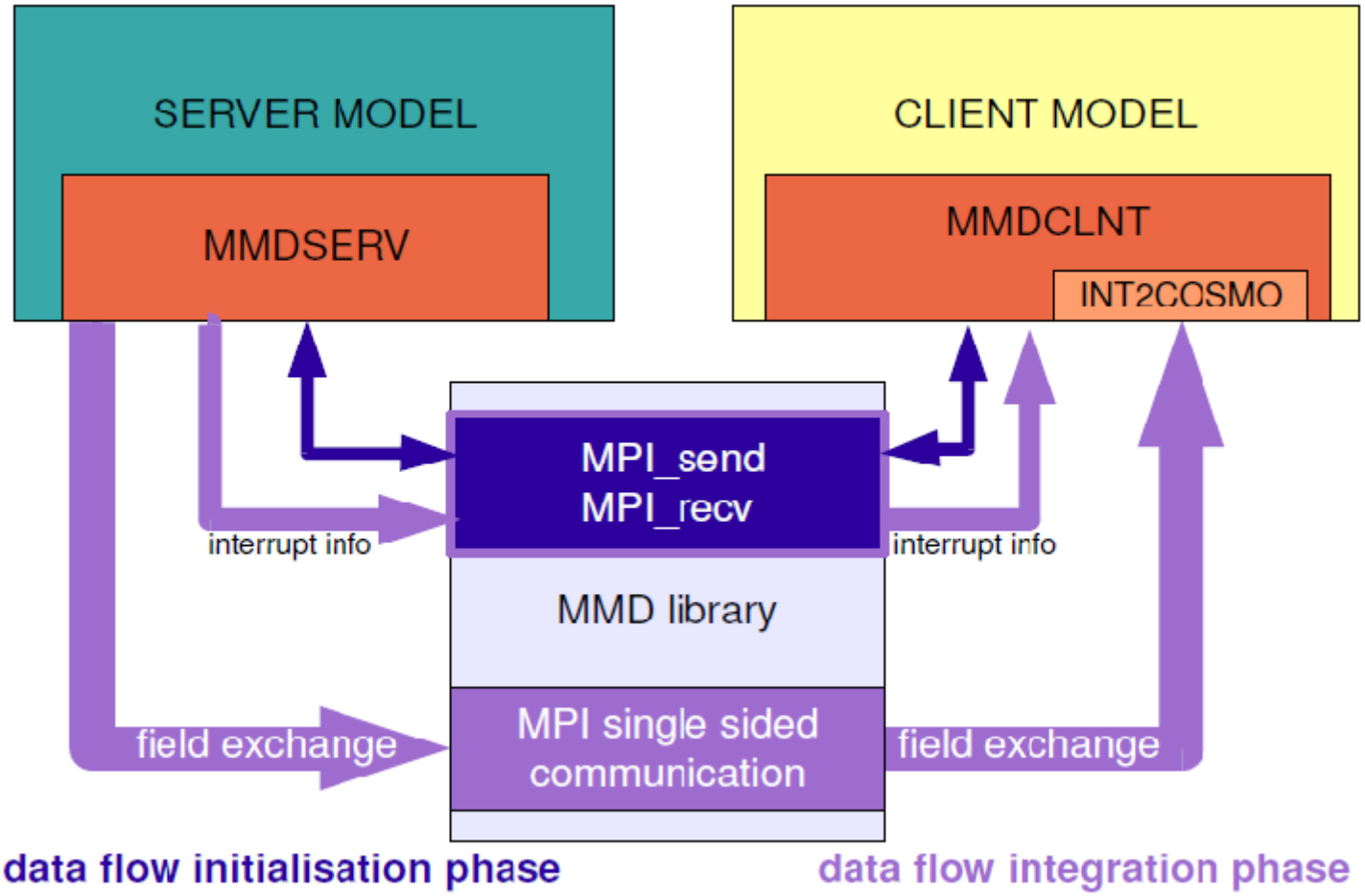

(Kerkweg & Jöckel, GMD, 2012b)

Example 2: On-line nesting: an alternative way to higher resolution

no. of tasks
ECHAM-
COSMO-40 km
COSMO-7 km

4-4-56
is most
efficient !

additional
effort to
optimize
efficiency !

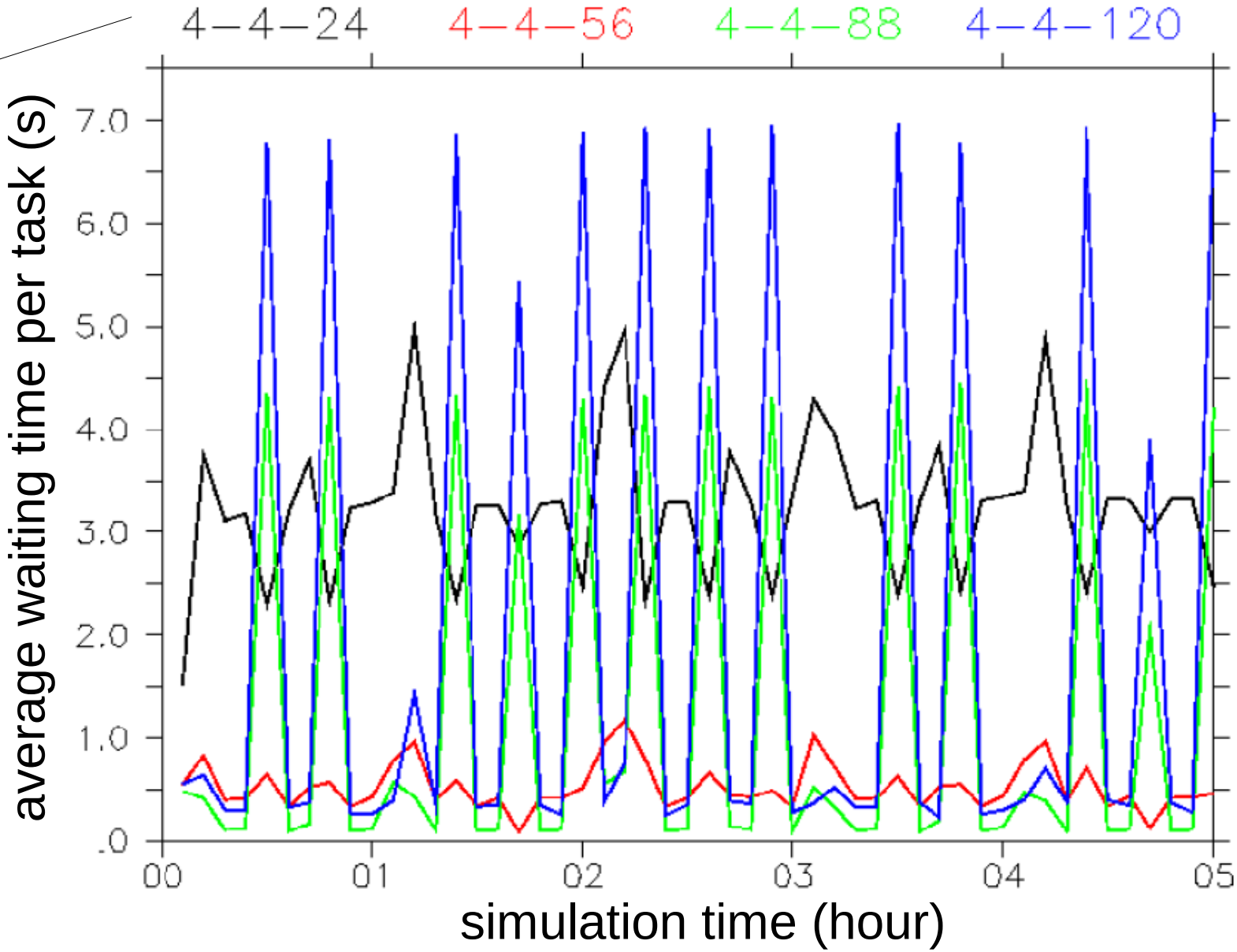

Summary

- ESMs are based on the coupling of different components (increasing complexity needs control! → modularity !!!).
- The Modular Earth Submodel System (MESSy)
  - formalises the operator splitting concept ...
  - … in a 4-layer software architecture ...
  - … with object oriented approaches (in Fortran95).
  - combines methods of internal and external coupling (MMD).
  - has originally been developed for atmospheric chemistry, but since “development cycle 2” it is general.
  - has “main” components (generic submodels), which can be
  - used independently.
  - is developed further by a consortium of institutions.

http://www.messy-interface.org

Thank you very much for your invitation and attention!

If you care about the acronym ...

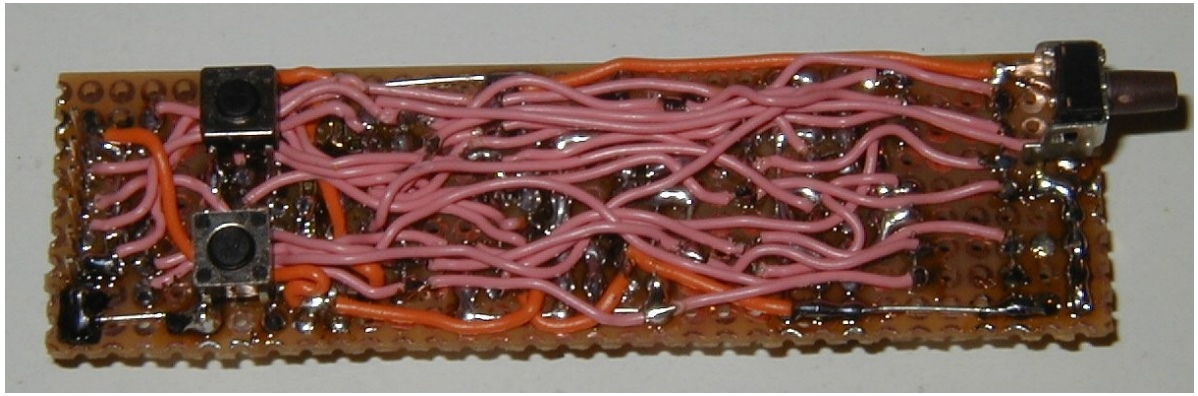

This is messy !

This is MESSy !!!

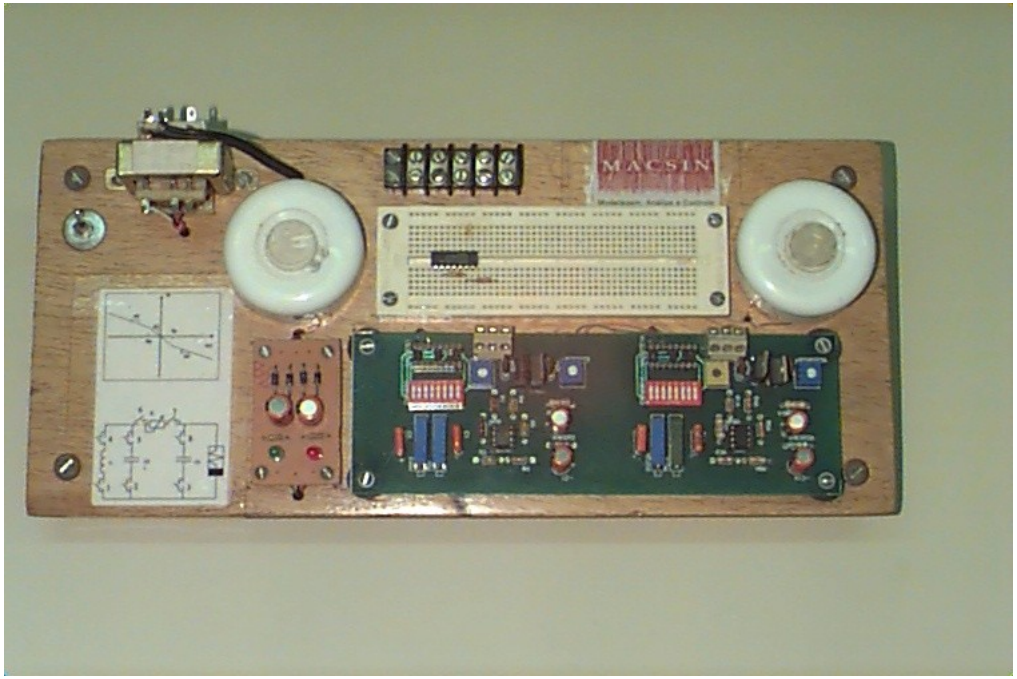

MESSy is NOT messy !!!