Noise reduction by aircraft innovations

Ulf Michel

German Aerospace Center (DLR)

Institute of Propulsion Technology, Engine Acoustics Department, Berlin

English Translation of a presentation at the symposium

Die Fracht braucht die Nacht (Freight needs night)

24 June 2010, Frankfurt Airport

Deutsches Zentrum
für Luft- und Raumfahrt e.V.
in der Helmholtz-Gemeinschaft

DLR
Deutsches Zentrum für Luft- und Raumfahrt
German Aerospace Center
Space Agency of the Federal Republic of Germany

DLR: Locations and Personel

6500 Employees work in
29 Research Institutes and Units in

- 13 Locations.

Offices in Brussels, Paris, Washington

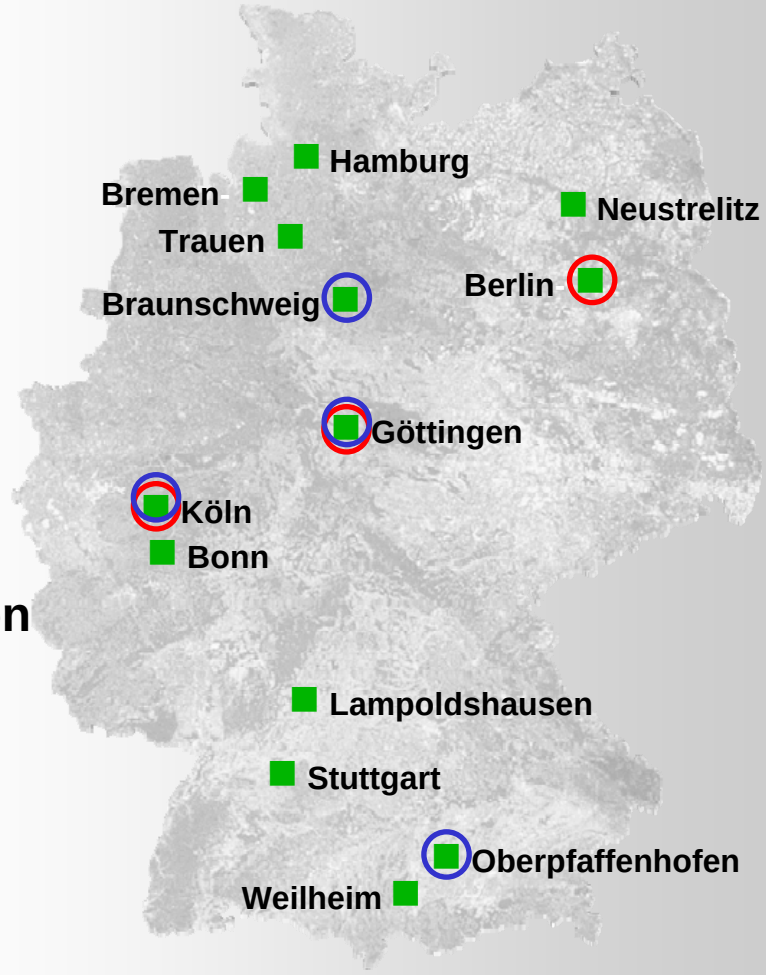

Locations of the Institute of Propulsion Technology and its external units

Further Locations with research activities in air-traffic noise

DLR locations with research in air traffic noise

Berlin, Cologne	Propulsion noise
Braunschweig	Airframe noise, flight procedures
Göttingen	Airframe noise, cabin noise, noise immission
Oberpfaffenhofen	Sound propagation in the atmosphere

Assessment of achievements in aircraft noise reduction with the aid of certification noise levels

Noise certification according to ICAO, Annex 16

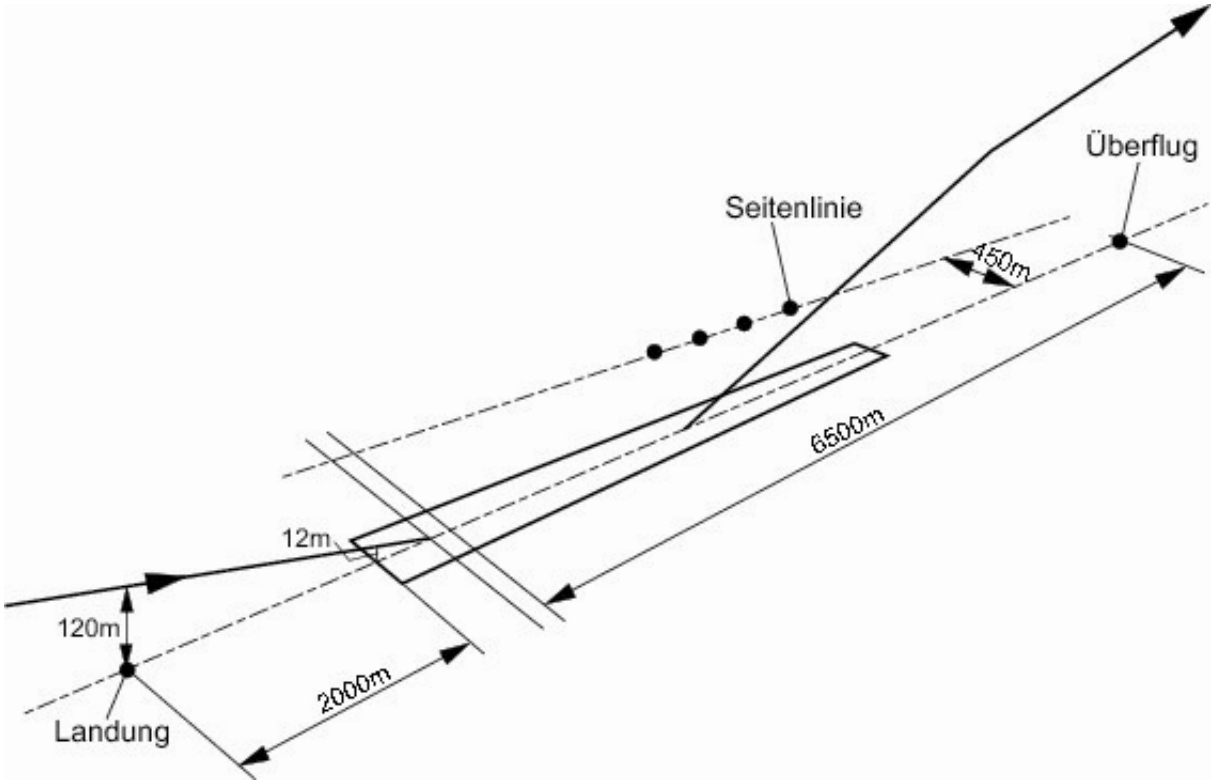

Take-off, sideline	**450 m lateral distance from runway**	**Engine**
Take-off, flyover	**6.5 km after start of roll**	**Engine and climb performance**
Approach	**2 km before landing threshold**	**Engine and airframe**

Achievements in noise reduction shown in terms of normalized sideline noise levels

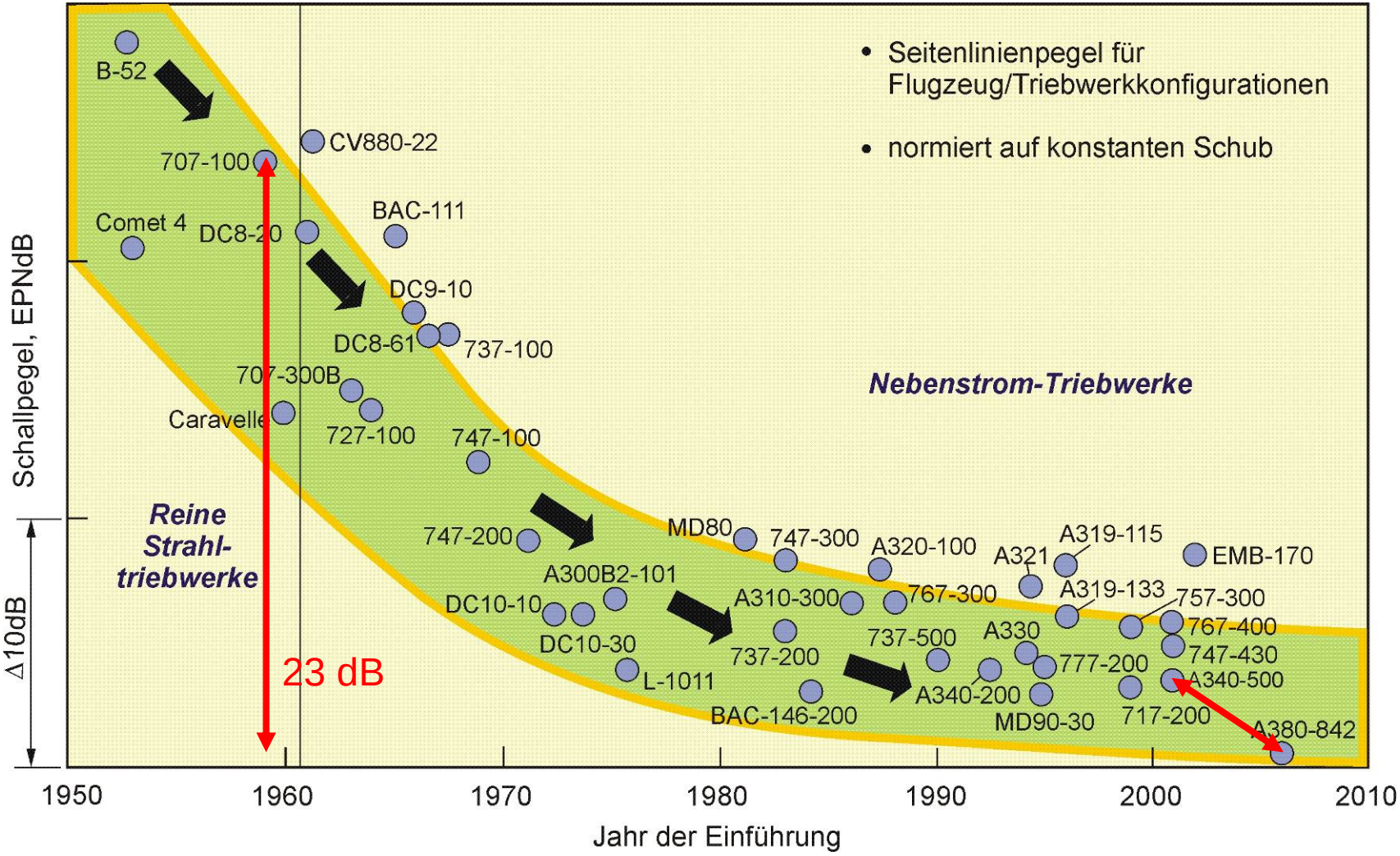

ICAO measuring point sideline normalized for constant thrust

- 23 dB noise reduction in 50 years.
- Reduction of normalized sound power by a factor of 200 to only 0.5% relative to Boeing 707-100.
- Apparently no significant noise reduction since 1985.
  Cause: ICAO noise limits are satisfied, quieter aircraft would have higher operating costs.
- Reduction of noise emission in the last 6 years is indicated by comparing A340-500 with A380-800. The latter is 4 dB quieter. 2 dB are the credit of one airline, which required this to avoid night-flying limitations in London.
- The engines of the A380 emit practically no tones.
- This will hopefully also be the case for all new aircraft with turbofan engines:
  Boeing 787, Boeing 747-8, Bombardier C-Series, Airbus A350

Survey of noise sources of a turbofan

Noise sources of Turbofans

Fan
- Tones at various frequencies
- Broadband noise
- “Buzz saw“ noise

Turbine
- High-frequency tones
- High-frequency broadband noise

Jet
- Low-frequency broadband noise

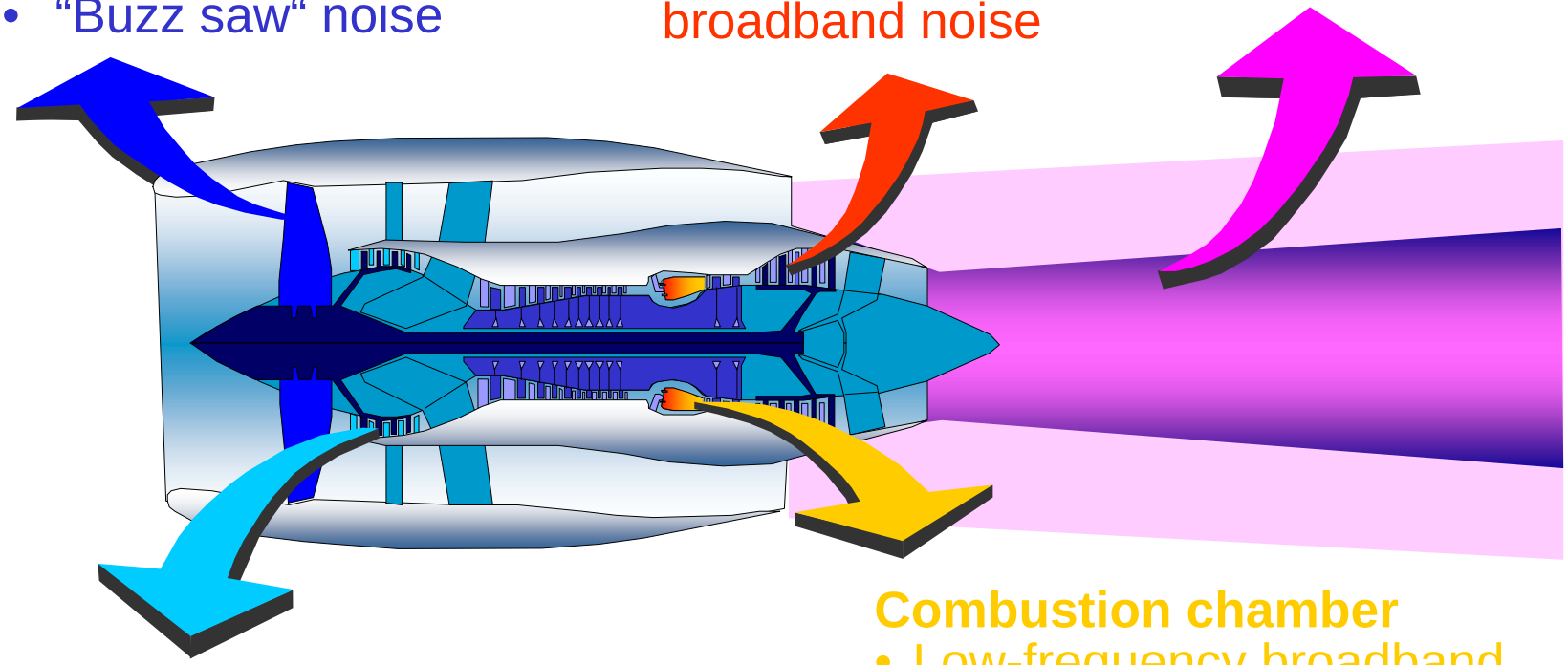

Combustion chamber
- Low-frequency broadband noise

Compressor
- High-frequency tones
  Broadband noise

Additional sound source with increasing importance: Bleed valves

- Bleed valves are necessary at part power (e.g., during landing)

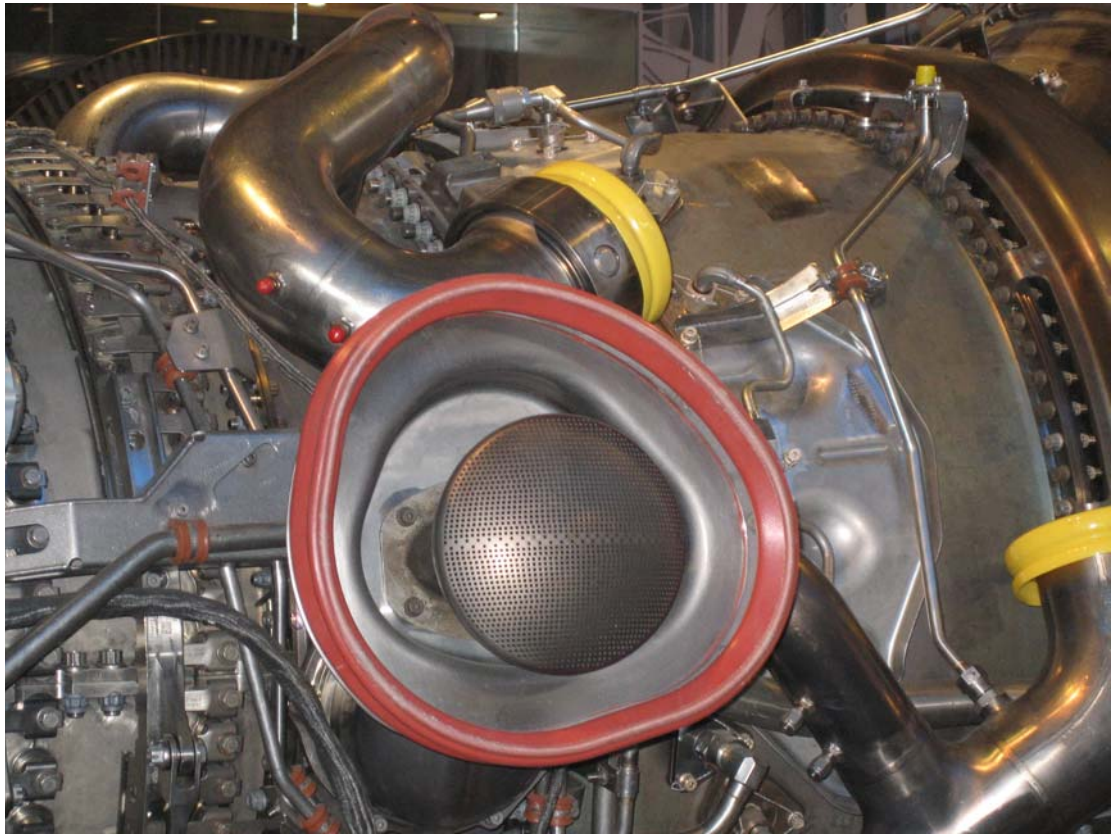

- Pressure in core engine is continuously increased in modern turbofans
- Part of the mass flow has to be bled.
- Pressure is relieved in hundreds of small jets.
- Sound emission large

Airframe noise sources

- High lift devices
  - Slats
  - Flaps
  - Landing gear
- Cavities of any kind may generate tones (like by an overblown bottle)

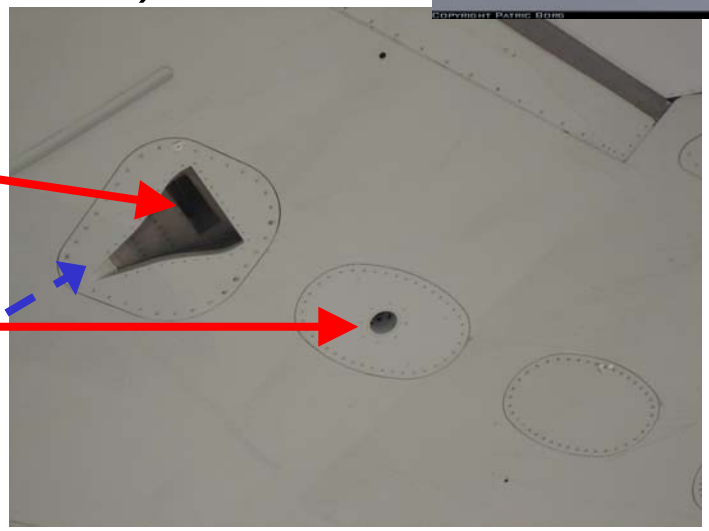

De-ice air outlets on nacelle generate tone

Which technical innovations have achieved today's noise reduction?

Technical innovations for the reduction of engine noise

1. **Introduction of the turbofan engine (bypass engine) and continuous increase of the bypass ratio to current values above 10 (since 1960)**

Innovations on engine

- Increase of bypass ratio (mass flow in bypass over mass flow in core)
- Technically more correct: reduction of fan-pressure ratio, resulting in
  - smaller jet speeds (see lower left)
  - higher Mass flows to maintain thrust (larger fan diameter, see lower right)

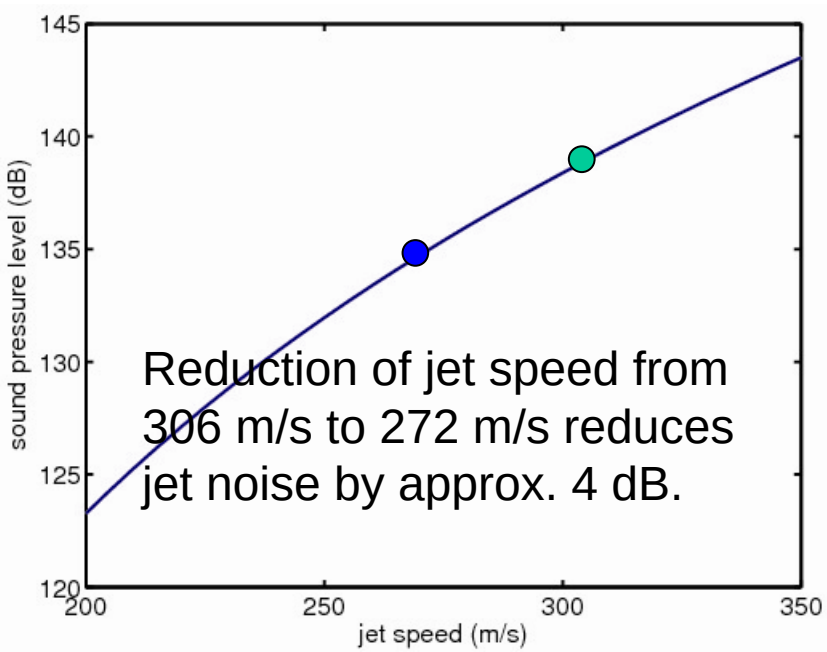

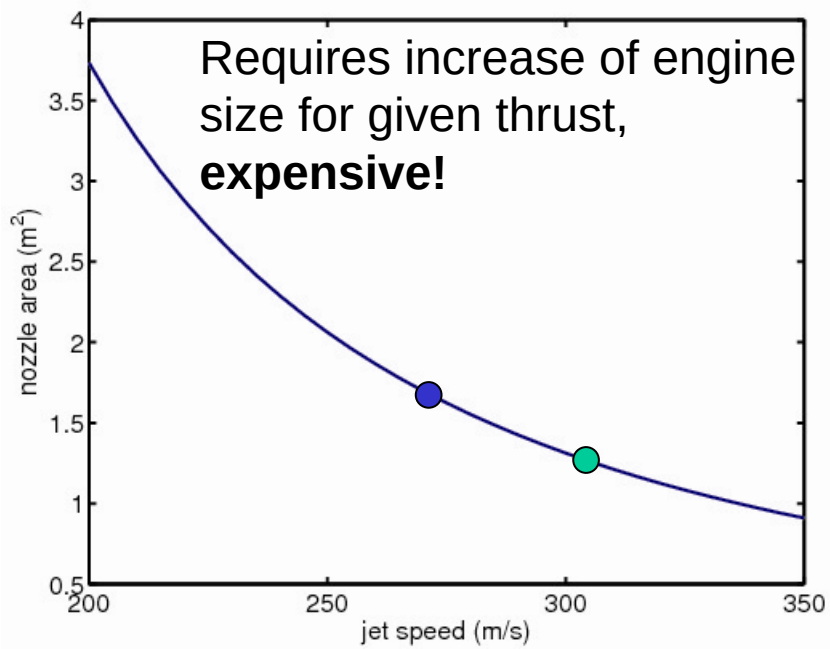

Technical innovations for the reduction of engine noise

1. Stepwise increase of bypass ratio to values above 10.
2. **Relocation of fan guide vanes to position downstream of rotor.**

First turbofans with inlet guide vanes

Rolls-Royce Conway
Inlet guide vanes cause very loud tones,
Bypass ratio 0.3
First turbofan in air transport

Further turbofans with inlet guide vanes:
JT3D, military version on Lockheed Starlifter C-141B, audible in Frankfurt until 2005

Spey, very ubiquitous on BAC 1-11

JT8D, Boeing 727, 737-100/200

Technical innovations for the reduction of engine noise

1. Stepwise increase of bypass ratio to values above 10.
2. Relocation off guide vanes downstream of rotor.
3. **Forced mixer for bypass ratios up to 7.**

Forced mixer

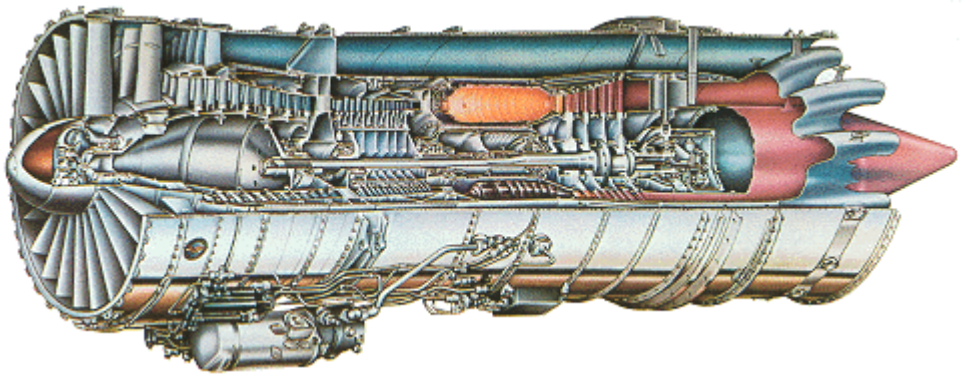

- Forced mixer increases thrust and reduces noise.

Early example (top figure):

JT8D (B727, B737-100/200)

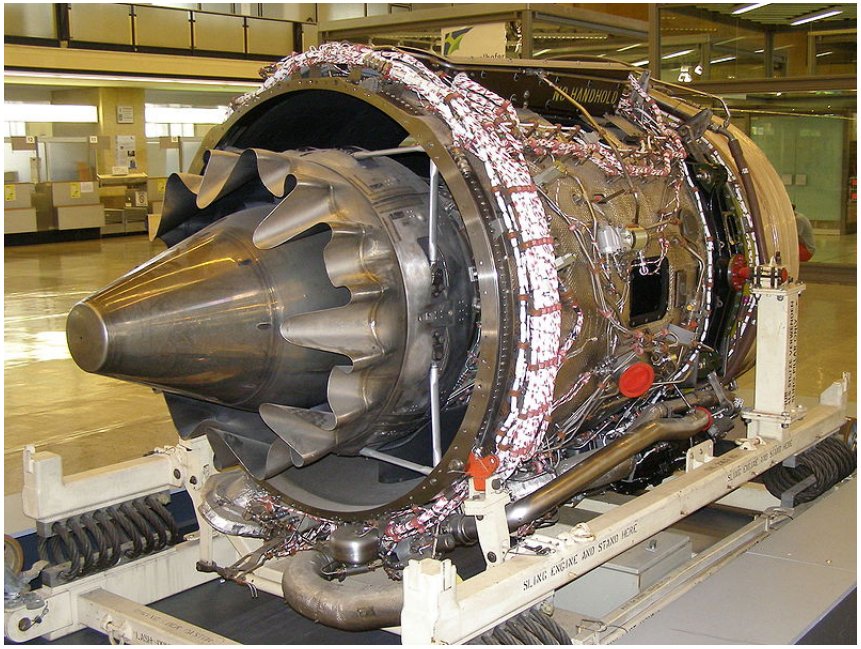

Current examples:

- BR710, BR725 (various business jets)
- BR715 (Boeing 717), figure left
- CFM56-5C (A340-200/300)
- PW6000 (A318)

Technical innovations for the reduction of engine noise

1. Stepwise increase of bypass ratio to values above 10.
2. Relocation off guide vanes downstream of rotor.
3. Forced mixer for bypass ratios up to 7.
4. **Increase of stator vane count (cut-off design).**

Cut-off design

- Careful selection of the stator vane count results in cut-off of the tone at the blade-passing frequency (waves can not propagate out of the engine)
- Relates to interaction between rotor and stator.
- Theory of Tyler and Sofrin (1962)

Technical innovations for the reduction of engine noise

1. Stepwise increase of bypass ratio to values above 10.
2. Relocation off guide vanes downstream of rotor.
3. Forced mixer for bypass ratios up to 7.
4. Increase of stator vane count (cut-off design).
5. **Increase of distance between rotor and stator.**

Current turbofans

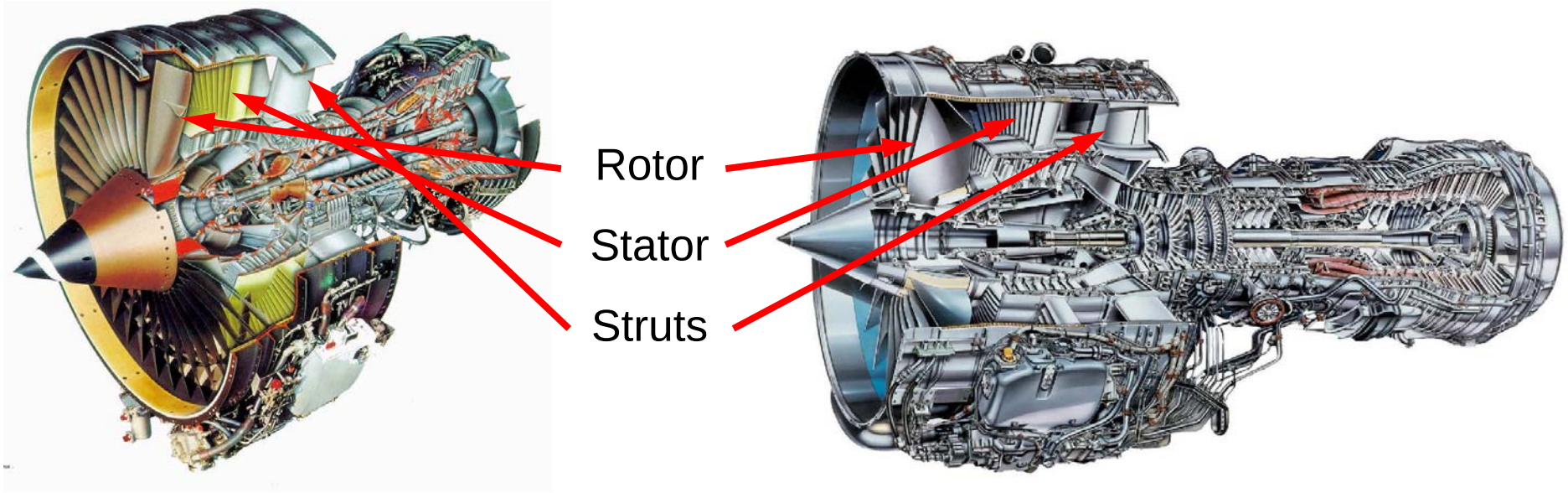

CFM56-5 IAE V2500

Undisturbed inflow to fan rotor

Both engine types of A320 feature struts downstream of stator.

Newest engines with very large distances between rotor and stator

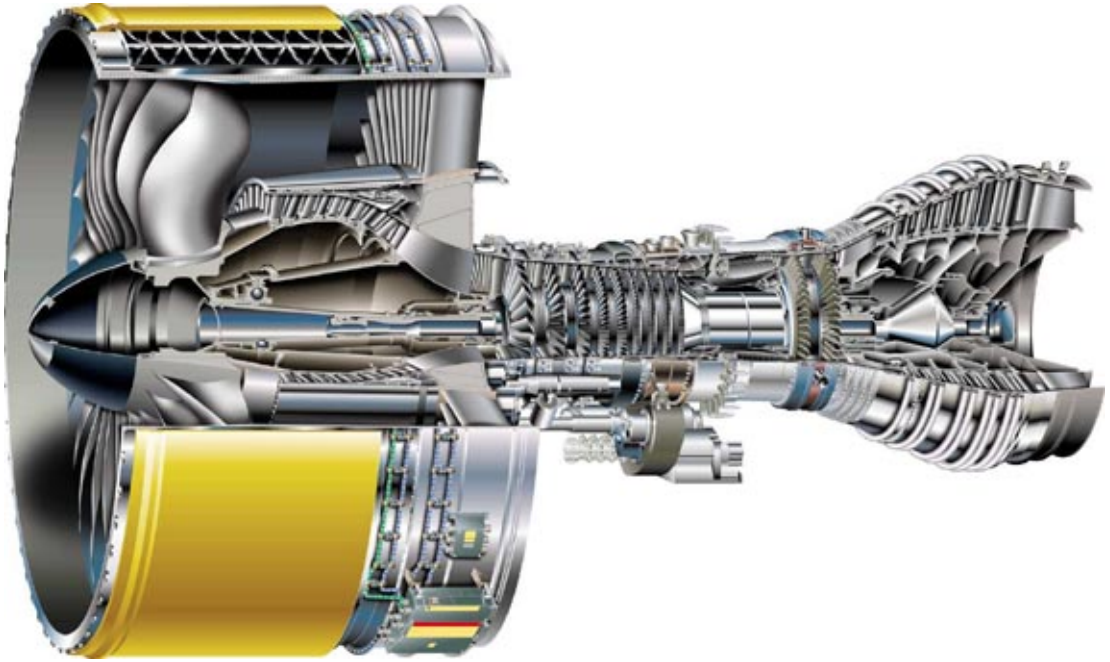

GP7200
(Engine of A380)

No more struts. Mounting of engine solved in a technically different way.

Technical innovations for the reduction of engine noise

1. Stepwise increase of bypass ratio to values above 10.
2. Relocation off guide vanes downstream of rotor.
3. Forced mixer for bypass ratios up to 7.
4. Increase of stator vane count (cut-off design).
5. Increase of distance between rotor and stator.
6. **Reduction of tip Mach number of fan blades**

Reduction of Mach number of circumferential tip speed of fan

Reduction of fan tip Mach number

past	M=1.45	Airbus A340-500/600 (Trent 500)
present	M=1.28	Airbus A380 (Trent 900, GP7200)
future	M=1.15	Boeing 787 (Trent 1000)

- Buzz tones apparently vanished on A380
- The smaller M, the larger is swirl in flow between rotor and stator.
- Swirl reduces rotor-stator interaction tones.
- Cut-off design might no longer be required, noise reduction potential of broadband noise.

Technical innovations for the reduction of engine noise

1. Stepwise increase of bypass ratio to values above 10.
2. Relocation off guide vanes downstream of rotor.
3. Forced mixer for bypass ratios up to 7.
4. Increase of stator vane count (cut-off design).
5. Increase of distance between rotor and stator.
6. Reduction of tip Mach number of fan blades
7. **Serrated nozzles (Chevrons)**

Reduction of jetnoise

- Jet is external sound source, thus only limited reduction potential for given jet speed.
- Serrated nozzle (chevrons) sole method with small thrust loss.
- Serrated outer nozzle improves mixing between jet and ambient air.
- Serrated inner nozzle improves mixing between hot core-flow (inner nozzle) and cold bypass flow (outer nozzle).

- Retrofit of existing engines possible.

- Chevrons on Boeing 787 mainly for reduction of cabin noise in cruise

Technical innovations for the reduction of engine noise

1. Stepwise increase of bypass ratio to values above 10.
2. Relocation off guide vanes downstream of rotor.
3. Forced mixer for bypass ratios up to 7.
4. Increase of stator vane count (cut-off design).
5. Increase of distance between rotor and stator.
6. Reduction of tip Mach number of fan blades
7. Serrated nozzles (Chevrons)
8. **Improvement of acoustic liners**

Passive acoustic liners

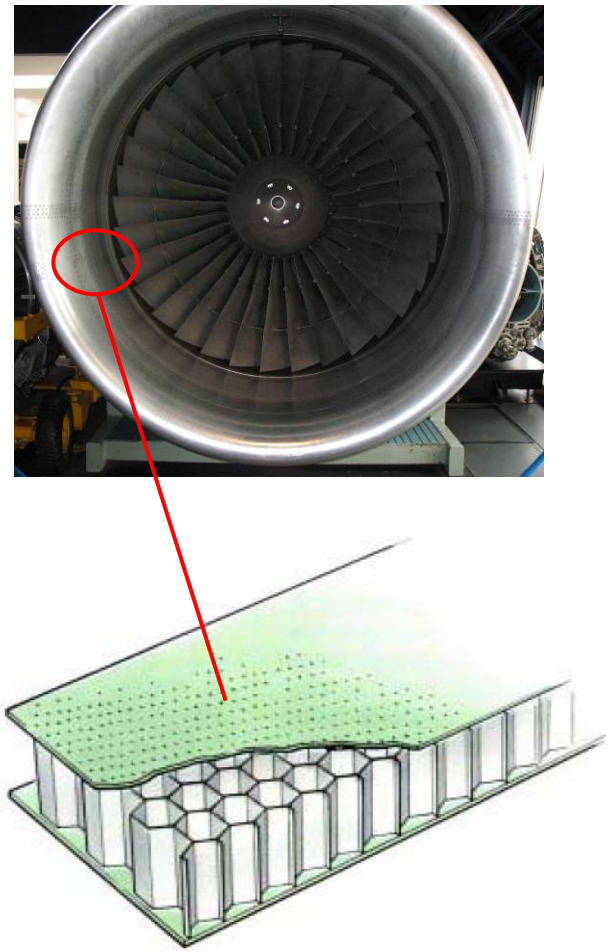

- Acoustic liners very important.
- Reduce sound emission of internal sound sources by up to 18 dB.

Progress:

- Surface of perforated plates replaced by wire meshes: sound absorbing performance less dependent on operating point of engine.
- Two layers of honey combs in some areas: better performance over larger frequency range.
- Liners in inlet manufactured in one piece without splices.
- Close to rotor no liner is better than liner with splices.

Sources: google; Rienstra;Pratt &Wittney; Hennecke

Innovations for reduction of airframe noise

Technical innovations for the reduction of airframe noise

1. **Design measures for eliminating cavity tones.**
2. **Reduction of slat noise**

Elimination of cavity tones

Cavity tones are the loudest sound sources during the approach of some aircraft.

Cavity tones can be localized before certification.

Measuring technique: phased microphone array

Up to 240 microphones on ground record flyover noise. Data reduction yields positions of all sound sources.

Source: DLR

Reduction of slat noise

- Noise reduction of high lift devices on leading edge:
- Replacement of slats by drooped leading edges on part of wing (also results in better climb performance)
- Further known measures for airframe noise reduction not yet applied, for example
  - Width reduction of slat gap reduces slat noise
  - Fairings reduce landing gear noise

Measures to be expected in the near future

Further increase of bypass ratio

Further increase of bypass ratios

Technical measures

- Slow fan driven by fast turbine via gearbox (Pratt & Whitney with MTU), will be installed on Bombardier C-Series
- Variable area nozzle ensures flutter-free operation of fan (installed on C-Series)
  - Reduction of engine noise during take-off by approximately 2 dB
  - Improvement of climb performance after take-off.

Variable fan nozzle

Advantages:

- Lower jet speeds
- Higher propulsive efficiencies
- Larger thrust
- Smaller fuel consumption
- **Lower noise**

Disadvantages:

- Higher mass
- Higher maintenance costs

New concepts for far future

EU goals for reduction of emissions until 2020: Advisory Council for Aeronautics Research (ACARE)

- -10 dB for each of the three certification points
- Very challenging Goal.
- Making available required technology
- New engine concepts necessary
  - Further development of geared turbofan
  - Counter rotating fan

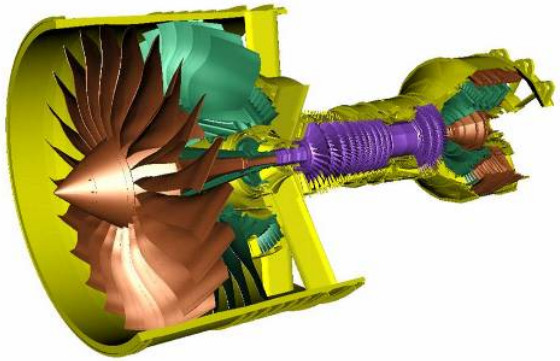

Counter rotating fan
(General Electric/Snecma)

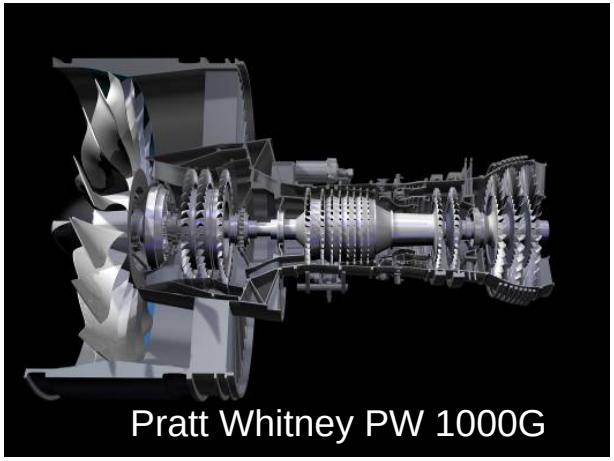

Ultra High Bypass Ratio Fan
With gearbox (PW, MTU, DLR)

New aircraft concepts


Source: Airbus

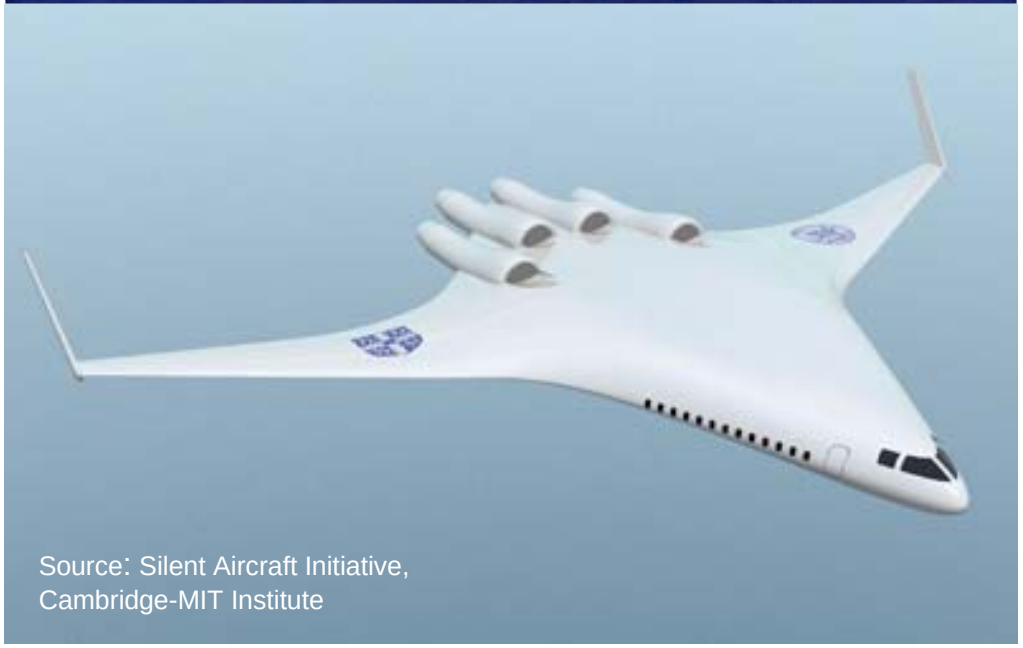
Source: Silent Aircraft Initiative, Cambridge-MIT Institute

- Noise reduction by shielding of noise radiation from engine inlets
- Jet noise cannot be reduced with this concept

New engine concepts:
Open counter rotating rotors

Source: ISVR

Source: CFMI

- A substantial reduction of fuel consumption is only possible through introduction of open rotors. High flight Mach numbers require counter rotating propellers.
- Noise reduction much more difficult in comparison to turbofan. Large research requirement.

Conclusion

- Engines have already become very quiet.
- Tones in airframe noise are eliminated.
- Current noise limits can be satisfied with existing technologies.
- More quiet aircraft under the current boundary conditions can only be realized, if this can be achieved without higher costs.
- A large part of the noise reduction at source in the past years was offset by increases of air traffic.
- Technical solutions and ideas exist to use noise reduction potentials in the future.
- Political support in form of continuous and lasting research funding is necessary.
- **New engine concepts** with large fuel savings potential will lead to a great challenge for noise research.