Journal of Physics: Conference Series

**PAPER** • **OPEN ACCESS**

# Review and evaluation of metal-hydride-based hydrogen sensors as safety devices for future sustainable aviation

To cite this article: F Franke *et al* 2023 *J. Phys.: Conf. Ser.* **2454** 012001

# Review and evaluation of metal-hydride-based hydrogen sensors as safety devices for future sustainable aviation

**F Franke[1], S Kazula[2], L Enghardt[3]**

[1] Research associate, German Aerospace Center (DLR), Cottbus, Germany
[2] Team leader, German Aerospace Center (DLR), Cottbus, Germany
[3] Acting director, German Aerospace Center (DLR), Cottbus, Germany

E-mail: florian.franke@dlr.de

**Abstract**. This paper presents an overview of metal-hydride-based hydrogen sensors and evaluates their potential for utilization in aerospace safety applications in future hydrogen-powered aviation. The 'electrical resistance', 'cantilever expansion', 'nanogap expansion', 'fiber optical', 'chemochromic optical' and 'acoustic' sensing principles are being described. Requirements including specific performance parameters for hydrogen sensors in aerospace safety applications are identified. Evaluation criteria are derived from these requirements and finally the sensing mechanisms are evaluated by means of a weighted point rating. The results of this evaluation reveal the high potential of 'electrical resistance', 'cantilever expansion', 'nanogap expansion' and 'fiber optical' sensors, although none of these principles meets all the requirements yet. With the transition to hydrogen-based aviation, metal hydrides and its various applications will become more attractive. Synergies between these technologies may further drive the research and development progress, so that metal-hydride-based hydrogen sensors can overcome their current drawbacks and contribute to the transition to future hydrogen-powered sustainable aviation.

## 1. Introduction

Aviation brings people together and delivers goods over long distances with high reliability and speed. Furthermore, aviation serves the society in other areas, such as emergency services, search and rescue, disaster relief and climate monitoring. In the future, aviation should still meet societal and market needs on the one hand, while being affordable, reliable and environmentally friendly on the other hand. According to Europe's vision for aviation, the so-called "Flightpath 2050", the impact on the environment should be reduced, for instance, by decreasing $CO_2$ and $NO_X$ greenhouse gas emissions, regardless of traffic growth. To achieve this goal, aviation has to move towards hybrid propulsion and sustainable energy sources, while living up to the highest levels of safety and security [1]. Hydrogen, used as jet fuel or in fuel cell applications, is a promising future energy carrier for the aviation industry [2]. It also empowers electrified aero engines to enter the aviation market [1, 2].

Hydrogen exhibits a high gravimetric energy density, but suffers a low volumetric energy density as a gas at ambient conditions. To enable the use of hydrogen in transport applications, storage systems, which reduce the volume of the hydrogen gas, are essential. Gaseous storage at high-pressure and liquid storage at cryogenic temperatures are common storage methods. Another promising method is solid hydrogen storage in metal hydrides. There, the hydrogen reacts with metallic compounds to form a metal hydride. These metal hydrides offer the highest possible volumetric storage densities, while possessing lower gravimetric densities compared to compressed or liquid hydrogen storage [3].

Although the high specific mass of metal hydrides prevents their use as a primary hydrogen storage in aviation, they may be beneficial as a secondary hydrogen storage system because of their inherent safety, long term storage properties and their various possible auxiliary functions [4]. For example, a metal-hydride-based hydrogen storage system can also serve as a heat sink during flight mission phases, which require a high power output and therefore imply a large amount of heat being rejected, like 'take-off' or 'climb' [4, 5]. By combining such essential functions within the metal hydride system, the overall specific mass on the aircraft level can be reduced.

Aside from compact and safe hydrogen storage, hydrogen leakage detection is also considered to be one of the key technologies for hydrogen-fueled aircraft [6]. Due to the very low ignition energy of hydrogen concentrations in air, an effective hydrogen detection must be ensured to minimize the hazard of fire or explosion [7]. Besides safety aspects, the release of hydrogen should also be prevented from an environmental point of view. As hydrogen indirectly influences global warming, its emission would partially offset the climate benefit of savings in $CO_2$ emissions [8]. Although the sensing of hydrogen is one of the various non-storage applications of metal hydrides, there are only a few commercial applications of metal-hydride-based sensors available [4, 9].

Metal hydrides enjoy an ongoing research emphasis because of their immense potential in engineering processes and devices [4]. The utilization of both hydrogen storage and non-storage applications may enable the use of metal hydrides in aviation, accelerate the development in metal hydride technology and contribute to the goal of an environmentally friendly future aviation.

This work is part of a research project that investigates the use of metal hydrides in aviation in general. This paper evaluates the application of metal hydrides for hydrogen detection in particular. First, the various mechanisms and properties of metal-hydride-based hydrogen sensing principles are being introduced. Subsequently, the evaluation methodology is presented and the requirements as well as evaluation criteria are derived. Finally, based on these criteria, the sensing mechanisms are evaluated by means of a weighted point rating for the use as hydrogen detectors in aviation safety applications and the most promising mechanisms are identified.

## 2. Review of metal-hydride-based hydrogen sensing mechanisms

Each type of hydrogen sensor is based on a different sensing mechanism, which may be classified as illustrated in Figure 1 [4, 10–13].

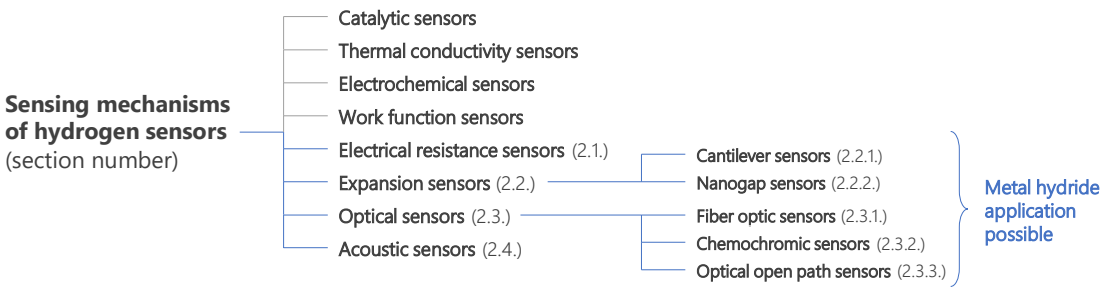


**Figure 1.** Classification of hydrogen sensing mechanisms and potential application of metal hydrides [4, 10–13].

These sensing mechanisms are characterized by various advantages and disadvantages. Combining different mechanisms extends the dynamic measurement range of the sensor, while improving its reliability through redundancy [11, 14]. Comparisons for benchmarking and selection of hydrogen sensors are provided by Hübert et al. [10, 11], Boon-Brett et al. [12], Manjavacas and Nieto [13] or Buttner et al [15]. Hydrogen sensors can be made out of numerous materials by exploiting their interaction with hydrogen.

Some metals and their hydrides change their electrical, mechanical or optical properties, when exposed to hydrogen. This behavior is suited for electrical resistance sensors, expansion sensors, optical sensors and acoustic sensors as highlighted in Figure 1. These sensor types will be discussed in the following chapters. The corresponding section numbers are also indicated in Figure 1 [4].

Especially the interaction of palladium with hydrogen has relevance regarding hydrogen sensing [11]. These specific interactions of hydrogen with the metal hydride sensing material enable selective hydrogen sensors. Such devices prevent potential cross sensitivities to other gases, which may occur for other sensing principles, making metal-hydride-based devices a promising sensor type to be investigated [10, 16].

### *2.1. Electrical-resistance-based metal hydride hydrogen sensors*

The electrical resistance of some metals and alloys changes with the absorption of hydrogen. The hydrogen atoms increase the number of scattering events between charge carriers in the crystal structure of the metal, which raises the material's electrical resistance. Ideally, the change of resistance is proportional to the square root of the hydrogen amount in ambient air. So far, yttrium, magnesium-nickel and palladium were investigated for hydrogen sensing based on the change of electrical resistance during metal hydride formation [11].

Palladium in particular is well suited for this application because of its high and selective hydrogen solubility at ambient temperature and its catalytic activity. The palladium hydride has an increased electrical resistance compared to palladium, which can be measured to detect the presence of hydrogen [10, 11]. For sensing applications, the metal, as the gas sensitive material, is applied as a film with a thickness of about 5 nm to 400 nm onto a substrate such as silicon, ceramic or glass between two electrical contacts [11].

Electrical-resistance-based metal film sensors offer very wide detection ranges from 10 ppm to 10 % $H_2$ or from 0.01 % $H_2$ to 100 % $H_2$ [10, 11]. They are able to operate within a relative humidity (RH) range of 0 % to 95 % and in the absence of oxygen [10, 11, 17]. Besides selective detection, the easy manufacturing and long-term stability with lifetimes greater 10 years are additional advantages [10, 11, 18, 19]. The response time of electrical-resistance-based metal film sensors is fast to moderate with values below 30 s [11, 17].

Such sensors also suffer drawbacks such as their high cost or the general hysteresis behavior of the electrical resistance of palladium [10, 19, 20]. Moreover, the signal output is affected by total gas pressure and temperature, so that the temperature has to be measured and controlled [10, 11]. Additional signal drift effects in the range of 0.4 % $H_2$ per week demand for periodic recalibration intervals [11, 21]. Electrical-resistance-based metal film sensors are also susceptible to poisoning from $SO_2$, $H_2S$ or CO [10, 11].

Commercially available examples of such sensors are the HY-Alerta™ series by H2scan or the InsuLogix H® by Weidmann, which also uses the H2Scan sensor technology. Both product lines exhibit a relatively large size of roughly 1 l volume and a high weight of above 1 kg, as well as high power consumptions between 10 W and 30 W [18, 21]. The H2Scan device has an accuracy ± 3 % of indication plus an additional offset of 0.2 % $H_2$ [21].

Such electrical-resistance-based sensors operate with electrical signals, which may provide a source of ignition, and therefore have to be installed according to Figure 2.

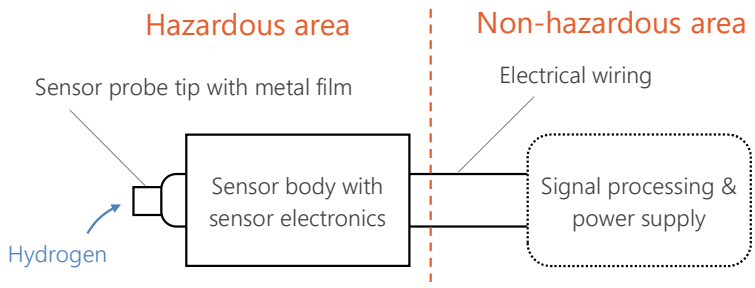


**Figure 2.** Installation guide for electrical-resistance-based sensors according to H2Scan [21].

*2.2. Expansion-based hydrogen sensors using the lattice expansion of metal hydrides*
Another feature of metal hydrides, which makes them suitable for hydrogen sensing, is the mechanical behavior of the metal's lattice expansion during hydrogen uptake. When hydrogen is absorbed by a metal, it occupies interstitial sites in the metal's lattice causing this lattice to expand [10].

*2.2.1. Expansion-based cantilever hydrogen sensors and other movable sensor designs*. There are various ways to convert the lattice expansion to measure the hydrogen concentration. One option is to use a micro-scale cantilever, where one side is coated with a hydride forming metal. Any volume expansion during the absorption of hydrogen causes a deflection of the cantilever as shown in Figure 3. This deflection may be measured by optical techniques, which are discussed in further detail in section 2.3. Another way to determine the deflection is to measure the change in capacitance between the cantilever and an additional baseplate [10].

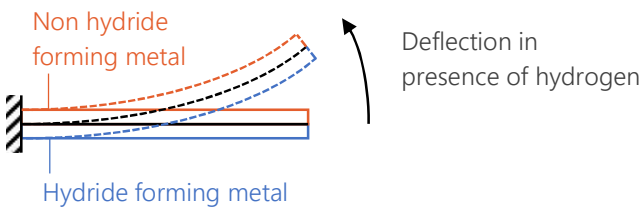


**Figure 3.** Bi-metal strip cantilever as an expansion-based hydrogen sensing unit based on Shaver [22].

In another option, the capacitance-based approach is realized without a cantilever [23]. There, the sensing unit consists of a fixed electrode and a movable electrode, where the movable electrode rests upon a hydride forming metal film as shown in Figure 4. In the presence of hydrogen, the film expands and pushes the movable electrode towards the fixed electrode. Thereby, the gap between the two electrodes is reduced and the capacitance is increased. Capacitance is measured as a function of the gap between the moveable electrode and the fixed electrode. The movable electrode may be pivot-mounted as shown in Figure 4. Hence, it can rotate towards the fixed electrode.

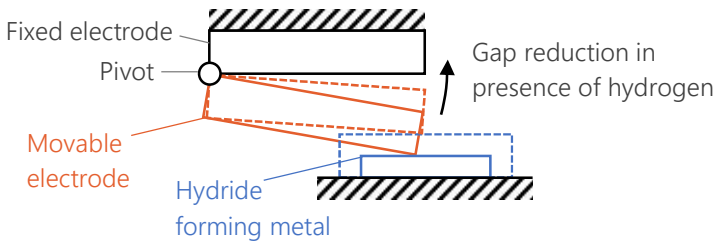


**Figure 4.** Metal hydride capacitance-based hydrogen sensing element according to Kirby et al. [23].

Cantilever hydrogen sensors promise a wide detection range from 0.1 % $H_2$ to 100 % $H_2$ with a linear response between 10 % and 90 % $H_2$. However, hydrogen sensing down to 50 ppm is possible. These sensors require no oxygen and are advantageous due to their small size and their potential to be inherently safe. When measuring the deflection by optical techniques, the sensing element can be set up without any electrical components, which diminishes a source of ignition [10].

On the other hand, cantilever sensors typically suffer slow response times of 90 s at 1 % $H_2$ and 30 s at 4 % $H_2$. The response time as well as the sensitivity deteriorates with increasing humidity. This effect can be reduced by heating of the cantilever. Further disadvantages are the susceptibility to poisoning and hydrogen induced aging effects, which are caused by delamination of the palladium film [10].

As there is limited amount of research published on cantilever hydrogen sensors, those advantages and disadvantages named above should be taken with care [10].

*2.2.2. Expansion-based nanogap hydrogen sensors.* In another approach, which converts the lattice expansion into a signal, palladium is applied as a nanoscale, discontinuous film with nanogaps. During the expansion of the palladium, these nanogaps close and form new electrical connections. Thereby, new conducting pathways emerge, which results in an overall decrease in the films electrical resistance [10]. This effect is contrary to the rise of the electrical resistance, which is the general material behavior described in section 2.1 [11]. The sensing mechanism of closing nanogaps is illustrated in Figure 5.

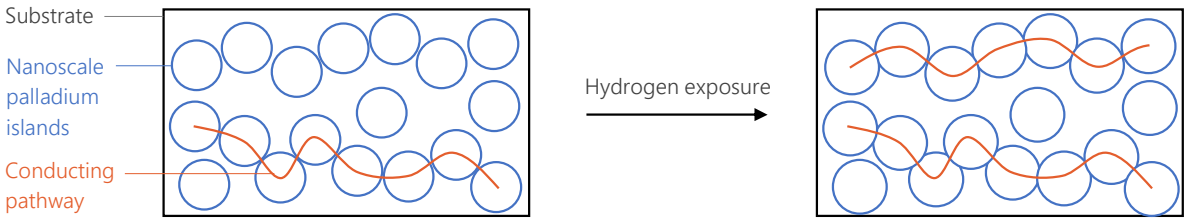


**Figure 5.** Palladium-based nanogap hydrogen sensing mechanism according to Lee et al. [19].

Expansion-based nanogap hydrogen sensors are characterized by their rapid kinetics with extremely fast response times below 1 s as well as short recovery times below 3 s [10, 11, 19]. They offer numerous other advantages like high reliability, low power consumption and high selectivity when heated [10, 11, 19]. These sensors can operate in the absence of oxygen as well as in humidity of up to 90 % RH and are not poisoned by CO, NO, $NO_2$, $NH_3$ or $CH_4$ [10, 17].

While nanogap sensors allow for extremely high sensitivities of 0.001 % $H_2$ (10 ppm), they suffer poor upper detection limits of generally below 1 % $H_2$ [10, 11, 17, 19]. Further disadvantages are their low stability for long-term use, their low reliability at wide temperature ranges from -40 °C to 200 °C or the complex methods needed for manufacturing [17, 19].

A market survey identified one single commercial application of an expansion-based hydrogen sensor. This sensor uses the nanogap-technology and is manufactured by Applied Nanotech Inc. [9]. However, this company discontinued the nanogap-based hydrogen sensor technology several years ago due to the lack of commercial progress [11, 24].

### *2.3. Optical hydrogen sensors based on the appearance of metal hydrides*

Some materials show a change in their optical properties in the presence of hydrogen. This effect can be used for the optical detection of hydrogen. For example, the reflectance of palladium decreases while the transmittance increases with the amount of hydrogen in the metal's lattice [11]. Optical hydrogen sensors detect such changes in the optical properties of a hydrogen sensitive layer, such as a change of the reflected light due to the absorption of hydrogen [12].

Optical hydrogen sensors can be divided in the following three categories [11]:

- Fiber optic hydrogen sensors,
- chemochromic sensors and
- optical open path sensors.

These types of optical hydrogen sensors will be described in the following passages.

*2.3.1. Fiber optic hydrogen sensors.* Most optical hydrogen sensors are based on thin films of the detection material, for example palladium, coated on the tip or along the length of an optical fiber. Such devices are known as optrodes and are illustrated in Figure 6 [10].

Optical hydrogen sensors either directly measure the change of optical properties like reflectivity, refractive index or color of the sensing material as shown in Figure 6 (A) and (B) or they utilize expansion causing the optical fiber to deform. The deformation can be evaluated by so-called Bragg networks according to Figure 6 (C) [10].

Optical fibers enable flexible and safe separation of sensing points and evaluation-electronics even across long distances. The fibers may either only transmit the signal or be an integral part of the sensing element [11].

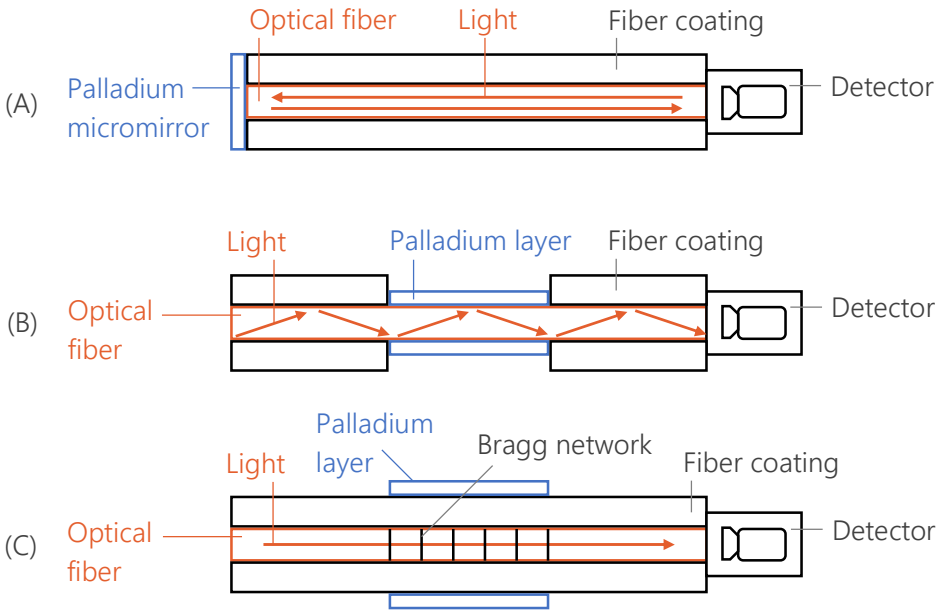


**Figure 6.** Fiber optic sensor configurations: (A) Fiber optic sensor with palladium micromirror, (B) Fiber optic sensor covered with a palladium layer, (C) Bragg network fiber optic according to Hübert et al. [10, 11].

The possibility to locate the sensing point remotely from the reading device creates installation flexibility and allows for wide area monitoring with only one device, when the optical fiber is coated with the sensing material at different points along the length. Furthermore, the optical signal is beneficial in terms of safety, because it is unaffected by electromagnetic interference and electric signals as potential sources of ignition are removed from the potentially hazardous area [10, 11, 13].

Furthermore, fiber optic sensors achieve wide detection ranges of 0.01 % $H_2$ to 100 % $H_2$ [10, 13, 25]. They require no oxygen, can operate in a humidity range from 0 % RH to 95 % RH, are resistant to corrosion and achieve lifetimes of more than 5 years [10, 11, 17].

As a drawback, fiber optic sensors do not allow for precise quantification of hydrogen [11]. Typical accuracies are between 10 and 30 % of indication [25]. In addition, periodic recalibration is necessary due to signal drifts caused by ageing effects [10, 11]. The signal drift may be below 1 % of the signal per month in air [25]. The signal output is further influenced by temperature and an interference from ambient light is also possible [10, 13]. The slow response time of up to 60 s as well as the high costs and the susceptibility to poisoning by $SO_2$ or $H_2S$ are other drawbacks [10, 11, 13, 17, 25].

Fiber optic hydrogen sensors are commercially available at Materion [25]. Those fiber optic sensors offer lower size, lower weight and a low power consumption of 1.3 W compared to the electrical-resistance-based sensors of H2Scan, but they suffer of lower accuracy [9, 21, 25].

*2.3.2. Chemochromic optical sensors.* Besides fiber optic hydrogen sensors, which use electronic devices to convert the optical sensing mechanism into a readable output, there are sensing materials showing a visible change in color. These so-called chemochromic sensors are based on materials that undergo a visually observable change in color in the presence of hydrogen due to a change of the absorption spectra in the visible range. Chemochromic sensors are not only suitable for optrodes but can also serve as an eye-readable sensor [11].

Based on metal oxides, there are irreversible as well as reversible sensors commercially available in a variety of formats including paint, tape, caulking, injection molded parts, textiles and fabrics, composites, decals and films from various suppliers [26–29]. While the change in color of irreversible products is permanent, the reversible chemochromic indicators reset in air, when the source of hydrogen gas is removed [26, 30]. However, the durability of such reversible detectors needs to be improved [11].

Although partial quantification of the hydrogen concentration is possible with chemochromic indicators, these products are more suitable for simple threshold detection. The thresholds reach down to 300 ppm, 400 ppm or 1 % $H_2$ [27, 28, 30]. That is why these products are more ideal for simple local leakage detection at valves, flanges, connectors, joints, fittings or welded seams, but they are not suitable for wide area monitoring [28, 30, 31]. Leaks can be detected visually, which requires periodic on-site inspections, or electronically, for example by camera surveillance [26, 29, 31]. The detected indications may be ambiguous and can require further monitoring [31]. Another drawback is the need for removal and reapplication of the chemochromic product during repair or correction measurements [31]. However, such products are of low costs and easy to install and remove. They require no infrastructure such as wiring, joints or instrumentation nor any power to operate [26, 29, 31]. They are small in size and require no additional design space. The commercially available, sophisticated products are durable and robust to environmental conditions with excellent temperature stability from -269 °C up to 232 °C, which allows them to be used in cryogenic fluid applications [26, 29, 31]. In addition, they are less sensitive to wind, position, duration or skills and are inherently safe, but they are susceptible to poisoning [27, 30]. Typical shelf life of such products is one year [29]. The response time of chemochromic sensors depends on hydrogen concentration, flow rate and temperature and may be as low as several seconds but can also take up to several days [27, 29–31].

Besides metal oxides, metal hydrides of yttrium, lanthanum and magnesium have shown chemochromic properties, too, and were also investigated as eye-readable sensors [10]. The assembly and the operation mechanism of an exemplary metal-hydride-based chemochromic detector is illustrated in Figure 7. The sensing layer is a thin film of yttrium (Y) applied on a quartz substrate. This sensing layer is topped with a palladium-film (Pd), which protects the sensing layer from oxidation, catalyzes the hydrogenation and dehydrogenation and enhances the visualization of the optical effects by interference effects. An additional layer of PTFE protects the palladium from deterioration by environmental contaminations [32, 33].

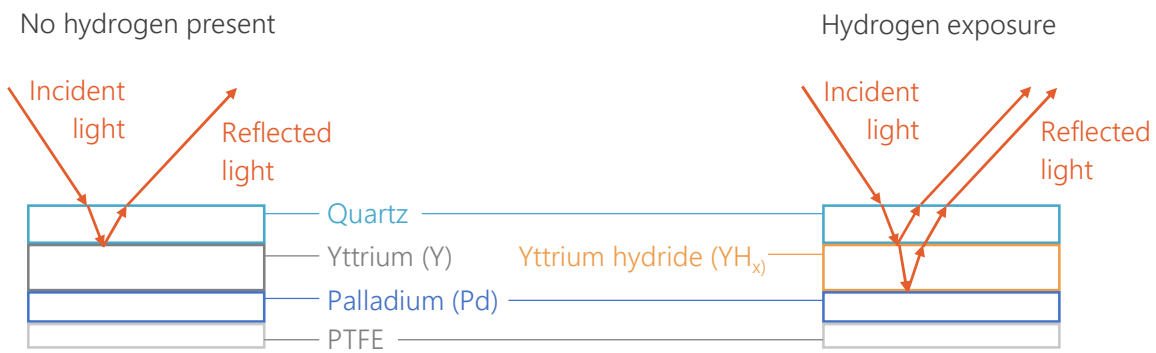


**Figure 7.** Operation principle of metal-hydride-based chemochromic hydrogen detectors according to Ngene et al. [33].

Pure yttrium is highly reflective. When no hydrogen is present, as illustrated on the left-hand side in Figure 7, nearly all the light falling in through the transparent quartz substrate is reflected by the yttrium. On exposure to hydrogen, as depicted on the right-hand side, the yttrium (Y) turns at first into semitransparent $YH_2$. With rising hydrogen concentration, which implies a higher hydrogen partial pressure, the transparent $YH_3$ is formed. In the $YH_x$ states, the light reflected by the palladium (Pd) has a component from the quartz-$YH_x$-interface and the $YH_x$-Pd-interface. This causes different colors to

be observed, when looking through the transparent quartz substrate. The resulting color change and the response kinetics of the detector can be tuned by adding magnesium. An $Mg_{50}Y_{50}$ alloy achieves an optimal combination of good optical contrast and reasonably fast response kinetics. Such metal-hydride-based chemochromic hydrogen detectors demonstrated stable reversible behavior after 60 loading and unloading cycles [32, 33].

Besides good reversible cycling behavior, metal-hydride-based chemochromic detectors promise further advantageous potentials, like good selectivity, high sensitivity with a lower detection threshold of 20 ppm, low costs and a fast response of 25 s to 0.25 % $H_2$ [32–34]. They require no oxygen and allow limited quantification by passing through different color states [32, 33]. These potentials raise prospects, that metal-hydride-based chemochromic sensors can be an appealing alternative to conventional metal-oxide-based chemochromic products.

*2.3.3. Optical open path hydrogen sensors.* Optical open path sensors detect hydrogen along a beam of light and enable wide area monitoring [11]. The exact location of the hydrogen is generally not measured. With the help of pulsed lasers, a spatial resolution can be generated by analyzing the time it travels [11].

Figure 8 shows a specific set-up of a metal-hydride-based open path sensor. This set-up enables two ways to check the presence of hydrogen. On the one hand, the detector measures the change of the transmittance through the metal film during hydrogenation and delivers an output signal. During hydrogen uptake the appearance of the film also visibly changes. This enables on the other hand an eye-readable check for hydrogen existence, analogous to conventional chemochromic sensors [16].

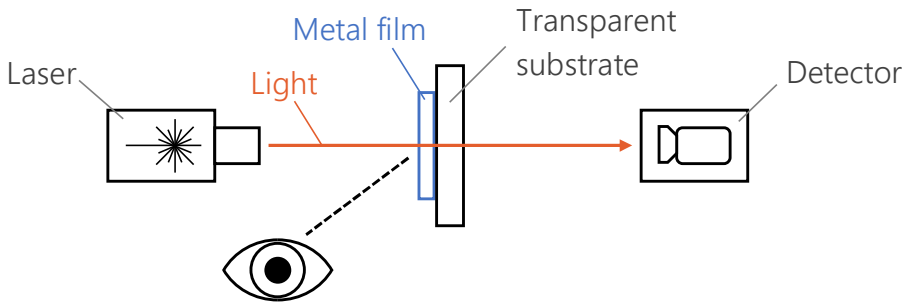


**Figure 8.** Measuring the change of optical properties relative to Yoshimura et al. [16].

*2.4. Acoustic hydrogen sensors*

In Hübert et al. [10], the term 'acoustic sensors' refers to devices, which detect changes in the properties of acoustic waves and not to devices, which identify the noise caused by gas leakage. Two examples according to this definition are devices measuring the sound velocity and devices called 'surface acoustic wave sensors'. Palladium may be used for both applications because of its property change during hydride formation.

The acoustic wave velocity in a solid waveguide depends on the material density and on the amount of stress and strain. Palladium is suited for a sensing application based on this mechanism, because it changes its mechanical properties during hydrogen uptake. This change in properties causes a detectable difference in the velocity of sound traveling through the material [10].

Surface acoustic wave sensors according to Figure 9 consist of a piezoelectric substrate, which is equipped with two so-called interdigital transducers and a hydrogen sensitive coating [10]. One of the transducers transforms an electrical signal into a surface acoustic wave and the other transducer converts this wave back into an electrical signal. When palladium is applied as the sensitive coating, this sensor utilizes the changes in mass density and in electrical conductivity of the palladium during hydrogenation. This creates a detectable change in the frequency of the sensor.

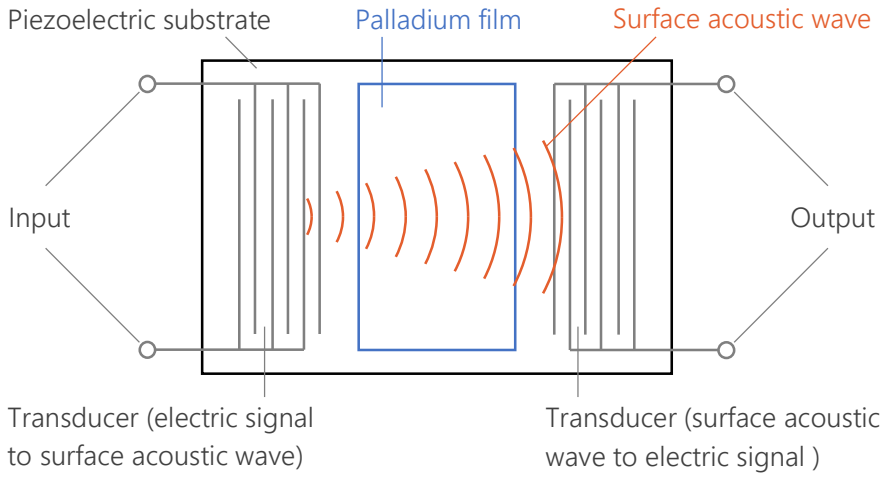


**Figure 9.** Schematic structure of a palladium-based surface acoustic wave sensor according to Hübert et al. [10].

Besides being able to operate in the absence of oxygen, acoustic hydrogen sensors offer high sensitivities, fast response behavior, low power consumption and a wide detection range from several ppm to 100 % $H_2$. As a drawback, acoustic hydrogen sensors show interference from other gases, temperature and humidity. Improving their long term stability and the difficult production of the coating of surface acoustic wave sensors are further challenges [10].

Despite their general suitability, no acoustic hydrogen sensors, according to the definition above, were identified to be commercially available [9, 10, 12].

## 3. Evaluation of metal-hydride-based hydrogen sensors for aerospace safety applications

There are numerous methods to assist the evaluation process for technical products, such as the combined technical and economical evaluation based on VDI-guideline 2225. These methods allow a holistic judgement to support the decision-making in case of various potential solutions. In addition, they enhance the plausibility and objectivity of the decision-making-process [35–37].

To be used in various stages of a development process, the evaluation method should not only be valid for quantitative criteria but also be suitable to rate qualitative criteria [36–38]. The general procedure of most such methods is illustrated in Figure 10 [35, 36, 38, 39].

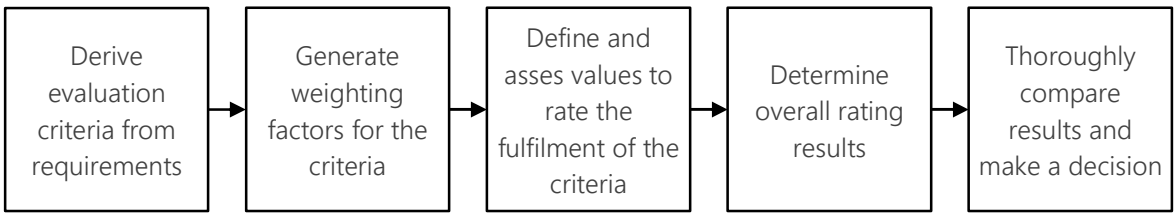


**Figure 10.** General procedure of evaluation methods for decision-making.

Each step of this procedure is covered in the following subchapters. Before starting with the evaluation procedure, a group of people from different engineering fields should be consulted to ensure a wide range of expertise, especially when rating subjective, qualitative criteria. In addition, the solution options have to be provided in comparable development stages to counteract misevaluations caused by different degrees of detail [36].

### *3.1. Evaluation criteria*

The evaluation criteria should be derived from the requirements list of a technical product. General requirements check lists to serve as guidance material are found in Feldhusen and Grote [36, 37] or Lindemann [40]. The evaluation criteria should be expressed as positive characteristics [37, 38]. Further recommendations to appoint the criteria are summarized by Feldhusen and Grote [36]. Minimum requirements in terms of being "show-stoppers" should not be considered as criteria [37].

In this work, the sensing mechanisms presented in section 2 are evaluated and compared concerning their suitability for hydrogen detection sensors in aerospace applications. For safety issues, the quantification of hydrogen concentration at the Lower Flammable Limit (LFL) level of 4 % $H_2$ in air is important [10]. Typical alarm thresholds are 0.4 % $H_2$ for the first alarm and 1 or 2 % $H_2$ for the main alarm [11, 41]. Besides these detection thresholds, the requirements summarized in Table 1 are relevant for hydrogen sensors in general.

**Table 1.** Requirements for hydrogen sensors [10, 13–15, 42].

| Metric type | Requirements |
|---|---|
| **Analytical metrics** | detection range, linear range, response and recovery time, accuracy, resolution, sensitivity, selectivity, stable signal with low noise, repeatability, signal drift, reversibility, mechanical robustness and safe performance (i.e. explosion proof sensor design and protective housing), robustness and reliability considering environmental parameters (such as: temperature, pressure, humidity, vibration or electromagnetic interference), cross sensitivity to other gases, gas flow rate independence |
| **Logistic metrics** | operational lifetime and shelf life, power consumption, cost, size, system integration and interface, operation and maintenance including service intervals, validation and certification according to international standards, maturity and availability |

Specific allowances for the performance parameters of these requirements may be derived from the standards IEC 60079, IEC 61508, IEC 60079-29-1:2007, ISO 26142:2010, SAE J3089, SAE AS6858 as well as from literature [10–13, 15].

The significance of the various performance parameters depends on the sensor's application. A sensor for process control for example, which has to measure precisely the hydrogen concentration within a specified range, requires sufficient resolution and accuracy, while the lower detection limit may be neglectable. A safety sensor, on the other hand, requires a lower detection limit at a fraction of the alarm threshold, without the need to resolve small changes in hydrogen concentrations [11]. This work focusses on safety sensors for aerospace applications. As no standards for this specific purpose exist, the requirements are defined with the help of related standards as well as literature recommendations. The elaborated requirements for aerospace safety applications are listed in Table 2 and are used for comparison and evaluation of the various sensor technologies in the following sections.

**Table 2.** Definition of performance parameter requirements for hydrogen sensors in aerospace safety applications.

| Characteristic | Requirement | Source |
|---|---|---|
| **Detection range** | lower limit: < 0.1 %<br>upper limit: 5 % $H_2$ (125 % of LFL) | [12, 43] |
| **Out-of-range operation** | survivability of sensor at 100 % $H_2$ | [41] |
| **Accuracy** | ± 5 % of indication at 4 % $H_2$ | [43] |
| **Kinetics** | response time < 3 s<br>recovery time < 3 s | [12] |
| **Ambient temperature** | - 56.5 °C to 45 °C | [44, 45] |
| **Ambient pressure** | 16 kPa (13.106 m altitude) to 108 kPa | [41, 46] |
| **Ambient humidity** | 0 to 100 % relative humidity (RH) | [12] |
| **Lifetime** | 10 years | [13] |
| **Signal drift** | for ≥ 0.1 % $H_2$: 30 % of signal in 3 months<br>for < 0.1 % $H_2$: 30 % of signal or 0.005 % $H_2$ in 3 months, whichever is larger | [41] |
| **Power consumption** | < 1 W | [12] |

The various requirements are grouped to derive the evaluation criteria. The criteria are described in the following subsections.

*3.1.1. Performance.* The performance criteria accounts for the quality characteristics of measuring the hydrogen concentration. The lower detection threshold and the upper detection limit frame the detection range. Within this range, the accuracy as well as the response behavior is of importance. A hysteresis behavior can cause serious performance disadvantages of hydrogen sensors [20]. Ideally, the sensor's signal response is linear, because a nonlinear response will lead to a decrease in sensitivity for some hydrogen concentrations [13]. The sensitivity is defined as the ratio of the change in signal produced by a known volume fraction of hydrogen. A high sensitivity is mandatory to measure low volume fractions [17, 41]. A high on-off ratio of the signal output is considered to be beneficial [19].

*3.1.2. Kinetics.* The dynamic behavior of the hydrogen detection is described by the response and the recovery time. The response time t90 is the time when the sensor response reaches 90 % of the final indication after instantaneous variation from clean air to a hydrogen gas mixture. The recovery time t10 is the time when the sensor response drops to 10 % of the indication after instantaneous variation from hydrogen gas mixture to clean air [12, 41].

*3.1.3. Environmental restrictions.* The hydrogen sensors should be robust to environmental influence, also in terms of showing low influence like a change in sensitivity. Environmental parameters are: ambient temperature range, humidity range and pressure range [14]. Hydrogen detectors should also exhibit a low susceptibility to poisoning. Poisoning is the permanent decrease of sensitivity of a hydrogen sensing element, caused by any substance contacting or adhering to the sensing element [41]. This criterion also covers the interference with magnetic fields or ambient light. Note that the influence of other gases, in terms of selectivity, is assigned to the 'Operational safety' criterion below.

*3.1.4. Ease of integration.* To enable the integration of safety devices in constricted design spaces and to reduce the efforts for installation, the hydrogen detector should be small and light in weight as well as exhibit high installation flexibility and easy mounting, which also implies low requirements in terms of infrastructure, such as wiring or instrumentation. Low manufacturing and operational cost as well as low power consumption are also considered in this criteria [14, 15].

*3.1.5. Operational safety.* The safe and reliable operation is vital for a safety device. As hydrogen sensors operate in a potentially explosive atmosphere, the explosion proof sensor design is fundamental [14]. Devices, where the sensor itself cannot provide a source of ignition because of the absence of electrical components, are inherently safe and therefore advantageous in such hostile environments [10]. This criterion also covers sensor lifetime and aging effects including characteristics like long-term stability, durability, cycling behavior (reversibility), corrosion resistance, shelf life, maintenance, repair and periodic inspections (on-site or remote) as well as calibration intervals to correct signal drift effects. Beneficial for safety is the capability for wide area monitoring, an unambiguous indication as well as a high selectivity. Selectivity is the response to hydrogen compared to the response to other gases. A high sensitivity reduces the cross-sensitivity to other gases and the ambiguity of the result [41].

*3.1.6. Level of maturity.* In general, the solution options have to be provided in comparable development stages to counteract misevaluations as written in chapter 3. As this requirement cannot be fulfilled because of the different levels of maturity in the various fields of technology, the 'Level of maturity' is introduced as one of the evaluation criteria. While sensing mechanisms with products, which are already used in aviation or meeting aviation industries requirements and being commercially available, achieve highest rating, sensing mechanisms, which are still in need of research, will gain a low rating.

### *3.2. Criteria weighting*

The weighting factors $w_j$ are real, positive numbers ranging from 0 to 1, which define the relevance of the criteria $j$. The sum of the factors $w_j$ of all criteria $j$ must be equal to 1 [36–38]. The weighting factors $w_j$ are generated by a pairwise comparison. This methodology is suited, when the majority of criteria have to be evaluated qualitatively and subjectively [36, 40].

For the pairwise comparison, all the criteria are compared to one another in a spreadsheet like Table 3. The criteria are benchmarked against each other according to their importance [40]:

- row criterion is more important than column criterion = 2,
- row criterion is equally important than column criterion = 1 and
- row criterion is less important than column criterion = 0.

The importance values are added up for each criterion and divided by the total value of all criteria to deliver the weighting factors $w_j$.

**Table 3.** Criteria weighting via pairwise comparison.

| Criterion | P | K | E | I | S | M | **Relative weighting factor $w_j$** |
|---|---|---|---|---|---|---|---|
| **Performance (P)** | - | 1 | 1 | 2 | 0 | 2 | 0.200 |
| **Kinetics (K)** | 1 | - | 1 | 2 | 0 | 2 | 0.200 |
| **Environmental restrictions (E)** | 1 | 1 | - | 1 | 0 | 1 | 0.133 |
| **Ease of integration (I)** | 0 | 0 | 1 | - | 0 | 1 | 0.067 |
| **Operational safety (S)** | 2 | 2 | 2 | 2 | - | 2 | 0.333 |
| **Level of maturity (M)** | 0 | 0 | 1 | 1 | 0 | - | 0.067 |

Values: row criterion is more important than column criterion (2), equally important (1), less important (0)

### *3.3. Assess values to the criteria and determine overall rating*

The grade of fulfilment of the criteria is rated with numerical measures $m_{i,j}$ within the following range according to VDI 2225 [37, 38]:

- very good fulfilment: $m_{i,j}$ = 4 points = + +,
- good fulfilment: $m_{i,j}$ = 3 points = +,
- moderate fulfilment: $m_{i,j}$ = 2 points = o,
- bad fulfilment: $m_{i,j}$ = 1 point = –, and
- very bad fulfilment: $m_{i,j}$ = 0 points = – –.

While a wider range of 10 eases the evaluation by the possibility to directly use percentages, such smaller ranges like in VDI 2225 are advantageous and the only meaningful approach in dealing with inadequately known characteristics and performance parameters [38]. The evaluation is performed with the help of the reviewed literature from chapter 2. The results of the evaluation are presented in Table 4 and illustrated in Figure 11.

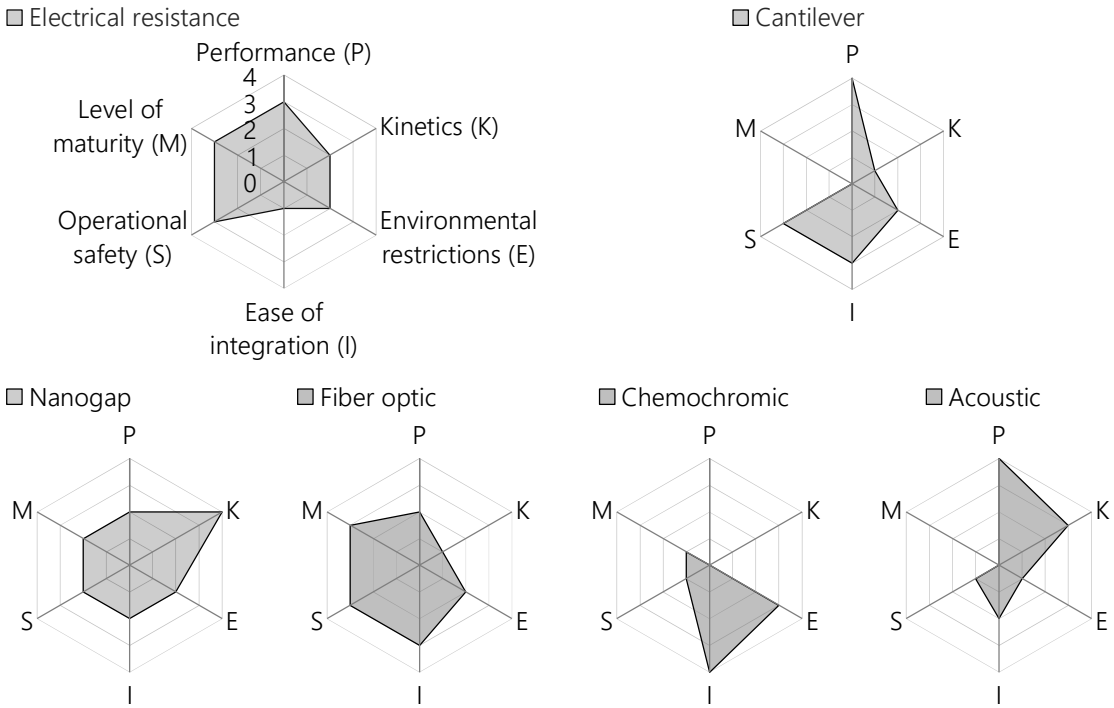


**Figure 11.** Illustration of evaluation results of the sensing mechanisms.

While the different advantages as well as drawbacks of each hydrogen sensing mechanism are visually highlighted in an illustration such as the spider plots in Figure 11, the most suitable mechanism cannot be easily identified from it because of the missing weighting of the criteria. Thus, the relative rating $r_i$ has to be calculated. By multiplication of the assessed numerical measures $m_{i,j}$ with the weighting factors $w_j$ and division by the scale size $m_{\max}$, the relative rating $r_{i,j}$ is determined for every criteria $j$ of every hydrogen sensing mechanism, which represents a possible solution $i$. The sum of these relative ratings $r_{i,j}$ of a single solution $i$ results in its overall rating $r_i$ specified in equation ( 1 ), where $k$ is the number of criteria and $n$ is the number of possible solutions [36–39]:

$$r_i = \sum_{j=1}^{k} r_{i,j} = \sum_{j=1}^{k} w_j \cdot m_{i,j}/m_{\max} \quad , for\ i = 1 \dots n. \qquad (1)$$

The results of this calculation of the overall rating $r_i$ of each mechanism $i$ are recorded at the bottom of Table 4. The highest relative ratings are achieved by the electrical-resistance-based hydrogen sensors as well as the cantilever sensors. This indicates a high potential for both mechanisms to be used in aerospace safety applications.

**Table 4.** Evaluation of hydrogen sensing mechanisms.

| Criteria | Electrical resistance | Cantilever | Nanogap | Fiber optic | Chemochromic[a] | Acoustic |
|---|---|---|---|---|---|---|
| **Performance (P)** ($w_1 = 0.200$) | Wide detection range, good accuracy, hysteresis | Wide detection range, linear response | Poor upper detection limit, high sensitivity | Wide detection range, low accuracy | Only threshold detection, limited quantification | Wide detection range, high sensitivity |
| | + | + + | **o** | **o** | – – | + + |
| **Kinetics (K)** ($w_2 = 0.200$) | Moderate response (<30 s) | Slow response (30 to 90 s) | Fast response (<1 s), fast recovery (<3 s) | Slow response (<60 s) | Depending on $H_2$ concentration, flow rate and temp. (10 s to days) | Fast response |
| | **o** | – | + + | – | – – | + |
| **Environment (E)** ($w_3 = 0.133$) | No $O_2$ required, temperature and pressure interference, humidity 0 to 95 %, susceptible to poisoning | No $O_2$ required, humidity decreases sensitivity, susceptible to poisoning | No $O_2$ required, low reliability at wide temp. range (-40 to 200 °C), humidity up to 90 % | No $O_2$ required, temperature interference and possible light interference, no magnetic interference, humidity 0 to 95 %, susceptible to poisoning | No $O_2$ required (MH), excellent temp. stability, less influenced by wind/ position/duration, susceptible to poisoning | No $O_2$ required, temperature and humidity interference, unstable at high temp. |
| | **o** | **o** | **o** | **o** | + | – |
| **Integration (I)** ($w_4 = 0.067$) | Large size, high weight, high cost, high power consumption, easy fabrication | Small size, different mechanisms for deflection measurement possible | Low power consumption, complex fabrication | Moderate size and weight, high cost, acceptable power consumption, installation flexibility | Small size, no infrastructure and no additional design space required, no power consumption, low cost (MH) | Low power consumption, difficult production |
| | – | + | **o** | + | + + | **o** |
| **Safety (S)** ($w_5 = 0.333$) | Selective detection, lifetime >10 years, signal drift requires calibration | Inherent safety (no source of ignition), susceptible to hydrogen induced aging effects | High selectivity (with heating), good reliability, low stability for long-term use | Inherent safety, lifetime >5 years, signal drift, wide area monitoring possible | Inherent safety, limited reversibility (MH: good reversibility), periodic inspections needed, indications may be ambiguous | Interference from other gases, long term stability needs improvement |
| | + | + | **o** | + | – | – |
| **Maturity (M)** ($w_6 = 0.067$) | Commercially available (no aerospace use) | Research only (TRL 4) | Commercial application stopped | Commercially available (no aerospace use) | Research only (MH, TRL 4), MO commercially available | Research only (TRL 4) |
| | + | – – | **o** | + | – | – – |
| **Rating $r_i$** | **0.63** | **0.62** | **0.60** | **0.57** | **0.27** | **0.50** |

Cell values: fulfilment of a criterion is very good + +, good +, average o, bad – or very bad – –

[a] Properties valid for metal-oxide (MO) detectors, properties of metal-hydride (MH) detectors are highlighted

### *3.4. Decision-making*

Besides the rating of the results, also subjective appraisement should be considered in the decision-making because of uncertainties or the influence of the choice and weighting of the criteria [35].

The four sensing principles 'electrical resistance', 'cantilever', 'nanogap' and 'fiber optic' receive high ratings with results close to each other. The electrical resistance sensors achieve the highest rating. They offer good performance and maturity, but the devices currently available are of high weight, large size and high power consumption. For the use in aviation industry, these characteristics need to be improved. The cantilever expansion sensors, which achieve the second highest rating, may overcome the drawbacks of the electrical resistance sensors already, but require further research. The mechanism with the third highest rating, the nanogap expansion sensor, misses the upper detection goal, but exhibits the fastest kinetics and is therefore the only principle, which meets the response and recovery time targets. Fiber optic sensors, on the fourth place, may be advantageous for larger planes and the entailed increased spaces to be monitored for hydrogen leakage because of the possibility of wide area monitoring with a single device. The installation flexibility, enabled by the independent positioning of the evaluation unit and various sensing elements along an optical wire, may be ideal for difficult design spaces and hardly accessible components. In combination with the inherent safety of optical sensing, especially for hostile environments, these advantages may overcome the poor response kinetics, making fiber optic sensors a suitable hydrogen sensor.

Although the chemochromic detectors received the lowest overall rating result, such hydrogen sensors are still favorable for some applications. Due to their characteristics, chemochromic sensors are indeed not ideal as primary leak detectors, but they are valuable in maintenance operations. When a hydrogen leak is not large enough to require an emergency shutdown and therefore does not trigger the primary leak detection system, chemochromic detectors still indicate an issue to be resolved during a routine maintenance operation. Hence, these products are beneficial, in combination with another sensing device [30].

## 4. Conclusions

The use of metal hydrides for hydrogen detection in electrical resistance sensors, cantilever expansion sensors, nanogap expansion sensors, fiber optical and chemochromic optical sensors as well as acoustic sensors has been presented. Furthermore, performance parameters of requirements for hydrogen sensors in aerospace safety applications have been identified. None of the hydrogen sensing mechanisms meets all the elaborated requirements as a hydrogen safety sensor in aviation yet, but for 'electrical resistance', 'cantilever', 'nanogap' and 'fiber optic' the results of this investigation are promising. Despite the specific advantages and disadvantages of these different sensing principles, metal-hydride-based sensors in general offer selective sensing behavior and require no oxygen for their operation.

Palladium in particular is widely used for hydrogen sensing because of its high and selective hydrogen solubility at ambient temperature and its catalytic activity [10]. Beside these advantages, palladium is vulnerable to cracking, blistering and delamination on repeated exposure to hydrogen. Improvements may be achieved by alloying or by additional buffer layers between metal film and substrate to prevent damages caused by the volume expansion of the metal [10, 11]. In addition, palladium is a noble material, and therefore contributes remarkably to the costs of the sensors [14]. The current palladium price as of July 2022 is about 60 000 € per kilogram [47]. Another drawback of palladium is its susceptibility to poisoning. Hydrogen sulfide as poisoning gas is present in most industrial and transportation environments and even in household environments. It affects the response of the palladium to hydrogen as well as its recovery in air [30].

Some sensing mechanisms of metal-hydride-based hydrogen sensors are still areas of further research, while commercial applications of other mechanisms already exist. At the moment, these different development stages impede a fully objective evaluation because of the different degrees of detail and therefore demand for further investigations in the next years to come.

The main goal of this work is to evaluate enabling technologies for hydrogen-based aviation. On the one hand, no superior properties of state-of-the-art metal-hydride-based sensors are identified that will contribute remarkably to achieve this goal. On the other hand, metal-hydride-based hydrogen sensors are still in need of research like the hydrogen-based aviation itself. As metal-hydrides and their applications enjoy ongoing research emphasis, metal-hydride-based hydrogen sensors will evolve and may overcome their current drawbacks. With the ongoing development of hydrogen-based aviation in parallel, other metal hydride applications, such as hydrogen storage or the use of metal hydride in thermal devices, may become more attractive. Synergies between these different metal hydride applications may further drive the research and development progress and metal-hydride-based sensors may become a key for enabling hydrogen-powered sustainable aviation.

**Acknowledgements**
We wish to acknowledge Stefanie de Graaf for her linguistic enhancements and her very helpful annotations.

## 5. References

[1] Darecki M et al 2011 *Flightpath 2050*: *Europe's Vision for Aviation; Maintaining Global Leadership and Serving Society's Needs; Report of the High-level Group on Aviation Research* European Commission (Luxembourg: Publications Office of the European Union)
[2] Baroutaji A, Wilberforce T, Ramadan M and Olabi A G 2019 Comprehensive Investigation on Hydrogen and Fuel Cell Technology in the Aviation and Aerospace Sectors. *Renew. Sust. Energ. Rev.* **106** 31–40
[3] Züttel A, Remhof A, Borgschulte A and Friedrichs O 2010 Hydrogen: The Future Energy Carrier. *Phil. Trans. R. Soc. A* **368** 3329–42
[4] Bhuiya M M H, Kumar A and Kim K J 2015 Metal Hydrides in Engineering Systems, Processes, and Devices: A Review of Non-storage Applications. *Int. J. Hydrog. Energy* **40** 2231–47
[5] Boll M, Corduan M, Biser S, Filipenko M, Pham Q H, Schlachter S, Rostek P and Noe M 2020 A Holistic System Approach for Short Range Passenger Aircraft with Cryogenic Propulsion System. *Supercond. Sci. Technol.* **33** 44014
[6] Bray R, Burrows E and Hadnum L 2022 *FlyZero*: *Aircraft-Systems* FZO-AIR-REP-0013 Aerospace Technology Institute
[7] Federal Aviation Administration 2017 *Energy Supply Device Aviation Rulemaking Committee*: *Final Report* DOT/FAA/TC-19/16 (Springfield, Virginia 22161)
[8] Warwick N, Griffiths P, Keeble J, Archibald A, Pyle J and Shine K 2022 *Atmospheric Implications of Increased Hydrogen Use* Department for Business, Energy and Industrial Strategy
[9] Hübert T and Schlischka J 2015 *The $H_2$Sense Hydrogen Sensor Database* BAM Bundesanstalt für Materialforschung und -prüfung
[10] Hübert T, Boon-Brett L, Black G and Banach U 2011 Hydrogen sensors – A review. *Sens. Actuators* B Chem. **157** 329–52
[11] Hübert T, Boon-Brett L and Buttner WJ 2015 *Sensors for Safety and Process Control in Hydrogen Technologies* (Boca Raton, London, New York: CRC Press Taylor & Francis Group)
[12] Boon-Brett L, Bousek J, Black G, Moretto P, Castello P, Hübert T and Banach U 2010 Identifying Performance Gaps in Hydrogen Safety Sensor Technology for Automotive and Stationary Applications. *Int. J. Hydrog. Energy* **35** 373–84
[13] Manjavacas G and Nieto B 2016 Hydrogen Senors and Detectors. *Compendium of Hydrogen Energy* **4** 215–34
[14] Hübert T, Boon-Brett L, Palmisano V and Bader M A 2014 Developments in Gas Sensor Technology for Hydrogen Safety. *Int. J. Hydrog. Energy* **39** 20474–83

[15] Buttner W J, Post M B, Burgess R and Rivkin C 2011 An Overview of Hydrogen Safety Sensors and Requirements. *Int. J. Hydrog. Energy* **36** 2462–70
[16] Yoshimura K, Bao S, Uchiyama N, Matsumoto H, Kanai T, Nakabayashi S, and Kanayama H 2008 New Hydrogen Sensor Based on Sputtered Mg–Ni Alloy Thin Film. *Vacuum* **83** 699–702
[17] Lee H-S, Kim J, Moon H and Lee W 2021 Hydrogen Gas Sensors Using Palladium Nanogaps on an Elastomeric Substrate. *Adv. Mater.* **33** 2005929
[18] Weidmann 2022 *InsuLogix H Hydrogen Monitor*: *Providing Actionable Information for Your Fluid Filled Electrical Equipment*
[19] Lee J, Shim W, Noh J-S and Lee W 2012 Design Rules for Nanogap-based Hydrogen Gas Sensors. *ChemPhysChem* **13** 1395–403
[20] Noh J-S, Lee J M, and Lee W 2011 Low-dimensional Palladium Nanostructures for Fast and Reliable Hydrogen Gas Detection. *Sensors* **11** 825–51
[21] H2Scan 2022 *HY-ALERTA™ Fixed Area Hydrogen Safety Monitors*
[22] Shaver P J 1969 Bimetal Strip Hydrogen Gas Detectors. *Rev. Sci. Instrum.* **40** 901–5
[23] Kirby D J, Chang D T, Stratton F P and Zinck J J 2009 A Differential Capacitive Thin Film Hydrogen Sensor. *Sens. Actuators* B Chem. **141** 424–30
[24] Fink R 2022 *Applied Nanotech Sensors Request;* E-mail [cited 2022 May 31]
[25] Materion GmbH 2022 *Technical Data and Specification*: *Optical $H_2$ – Sensor;* Type $MOHS_3$
[26] Roberson L B, Williams M, Captain J E, Mohajeri N and Raissi A 2015 *Color Changing Hydrogen Sensors* NASA; HySense; University of Central Florida
[27] Nitto, Inc. 2018 *Nitto Hydrogen Detection Tape Product Data Sheet*: *DX-2106H*
[28] Midsun Specialty Products Inc. 2022 *DetectTape Product Overview*
[29] Midsun Specialty Products Inc. 2020 *DetectTape $H_2$ Product Data Sheet*
[30] Benson D K, Hoagland W and Smith R D 2013 Very Low-cost Visual and Wireless Sensors for Effective Hydrogen Gas Leak Detection. In: *International Conference on Hydrogen Safety 2013* Progress in Safety of Hydrogen Technologies and Infrastructure (Brussels 09.-11.09.2013)
[31] Hartmann K, Buttner W, Burgess R and Rivkin C 2016 *Passive Leak Detection Using Commercial Hydrogen Colorimetric Indicator* National Renewable Energy Laboratory (NREL)
[32] Radeva T, Ngene P, Slaman M, Westerwaal R, Schreuders H and Dam B 2014 Highly sensitive and selective visual hydrogen detectors based on YxMg1−x thin films. *Sens. Actuators* B Chem. **203** 745–51
[33] Ngene P, Radeva T, Slaman M, Westerwaal R J, Schreuders H and Dam B 2014 Seeing Hydrogen in Colors: Low-Cost and Highly Sensitive Eye Readable Hydrogen Detectors. *Adv. Funct. Mater.* **24** 2374–82
[34] Ngene P, Radeva T, Westerwaal R, Schreuders H and Dam B 2014 Eye Readable Metal Hydride Based Hydrogen Tape Sensor for Health Applications. In: *SPIE Optical Engineering + Applications* (San Diego); 920203
[35] Ehrlenspiel K, Kiewert A, Lindemann U and Mörtl M 2014 *Kostengünstig Entwickeln und Konstruieren*: *Kostenmanagement bei der integrierten Produktentwicklung* 7th ed. (Berlin: Springer Vieweg)
[36] Feldhusen J and Grote K-H 2013 *Pahl/Beitz Konstruktionslehre*: *Methoden und Anwendung erfolgreicher Produktentwicklung* 8th ed. (Berlin, Heidelberg: Springer Vieweg)
[37] Feldhusen J and Grote K-H 2015 *Dubbel : Taschenbuch Für Den Maschinenbau*: *F - Grundlagen der Konstruktionstechnik* 24th ed. (Berlin, Heidelberg: Springer)
[38] Pahl G, Beitz W, Blessing L, Feldhusen J, Grote K-H and Wallace K 2007 *Engineering Design*: *A Systematic Approach* 3rd ed. (London: Springer London Limited)

[39] Kazula S, Graaf S de and Enghardt L 2022 Review of Fuel Cell Technologies and Evaluation of their Potential and Challenges for Electrified Propulsion Systems in Commercial Aviation. In: *Proceedings of Global Power and Propulsion Society* (Chania 12.-14.09.2022)
[40] Lindemann U 2009 *Methodische Entwicklung technischer Produkte*: *Methoden flexibel und situationsgerecht anwenden* 3rd ed. (Berlin, Heidelberg: Springer)
[41] International Organization for Standardization 2010 *Hydrogen Detection Apparatus - Stationary Applications* ISO 26142
[42] SAE International 2017 *Installation of Fuel Cell Systems in Large Civil Aircraft* AS6858
[43] UNECE 2019 *Einheitliche Bestimmungen für die Genehmigung von Kraftfahrzeugen und Kraftfahrzeugbauteilen hinsichtlich der sicherheitsrelevanten Eigenschaften von mit Wasserstoff und Brennstoffzellen betriebenen Fahrzeugen (HFCV) [2019/795]* ECE 134
[44] European Aviation Safety Agency 2015 *Certification Specifications and Acceptable Means of Compliance for Large Aeroplanes* CS-25 Amendment 27
[45] European Aviation Safety Agency 2015 *Certification Specifications and Acceptable Means of Compliance for Normal, Utility, Aerobatic, and Commuter Category Aeroplanes* CS-23 Amendment 4
[46] Matthews C 2002 *Aeronautical Engineer's Data Book* (Oxford: Butterworth-Heineman)
[47] finanzen.net GmbH 2022 *Palladiumpreis* [cited 2022 July 6]