COMBINED RENEWABLE PROCESS STEAM AND POWER SUPPLY WITH POWER-TO-HEAT AND HIGH-TEMPERATURE THERMAL ENERGY STORAGE

Thomas Bauer, Marco Prenzel

German Aerospace Center (DLR), Institute of Engineering Thermodynamics, 51147 Cologne, Germany

Temperature levels and process heat demand in Germany

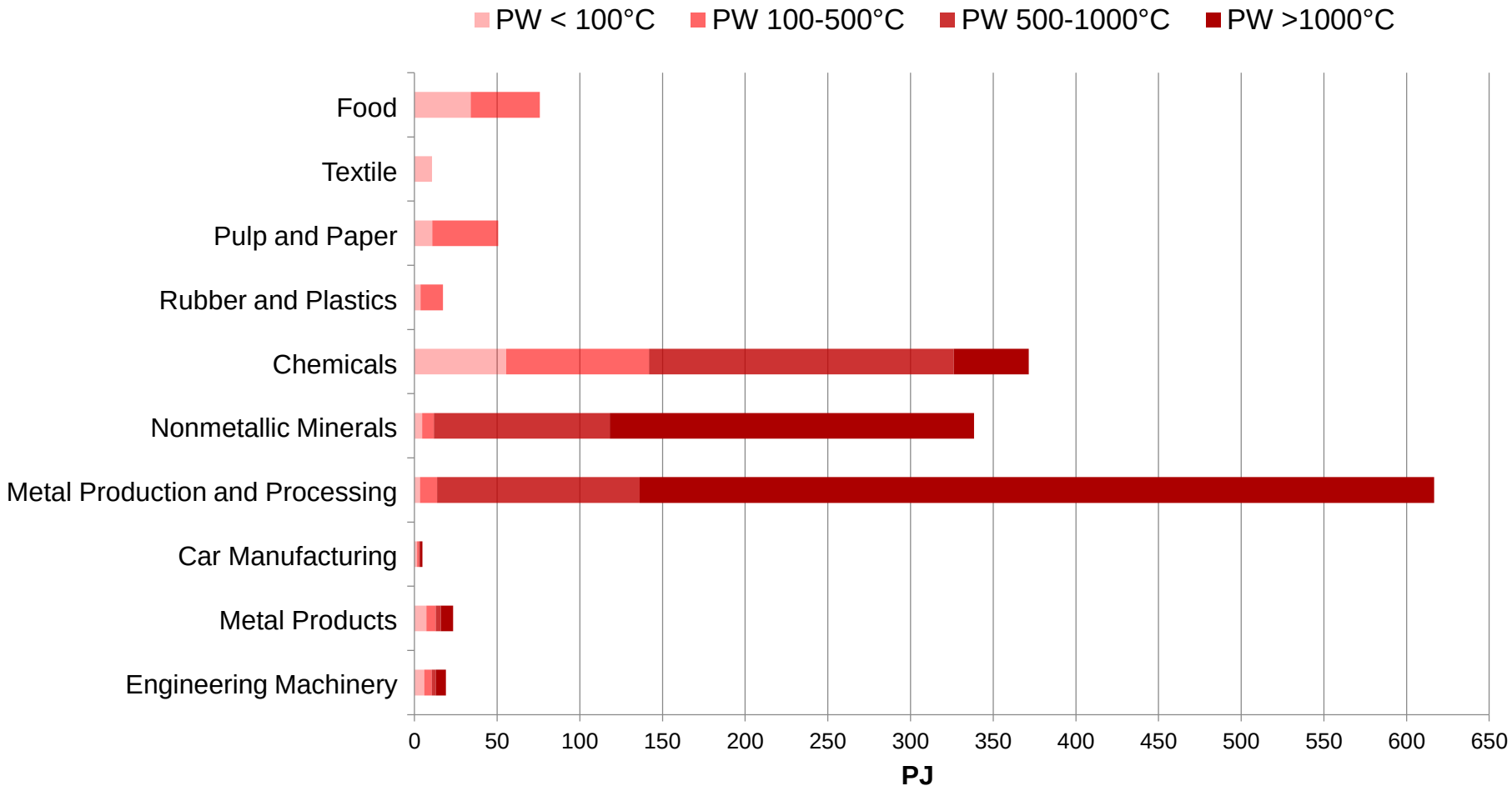

Source: M. Nast, DLR 2010

→ The chemical industry has a large need for process steam

Use of thermal energy storage in industrial processes

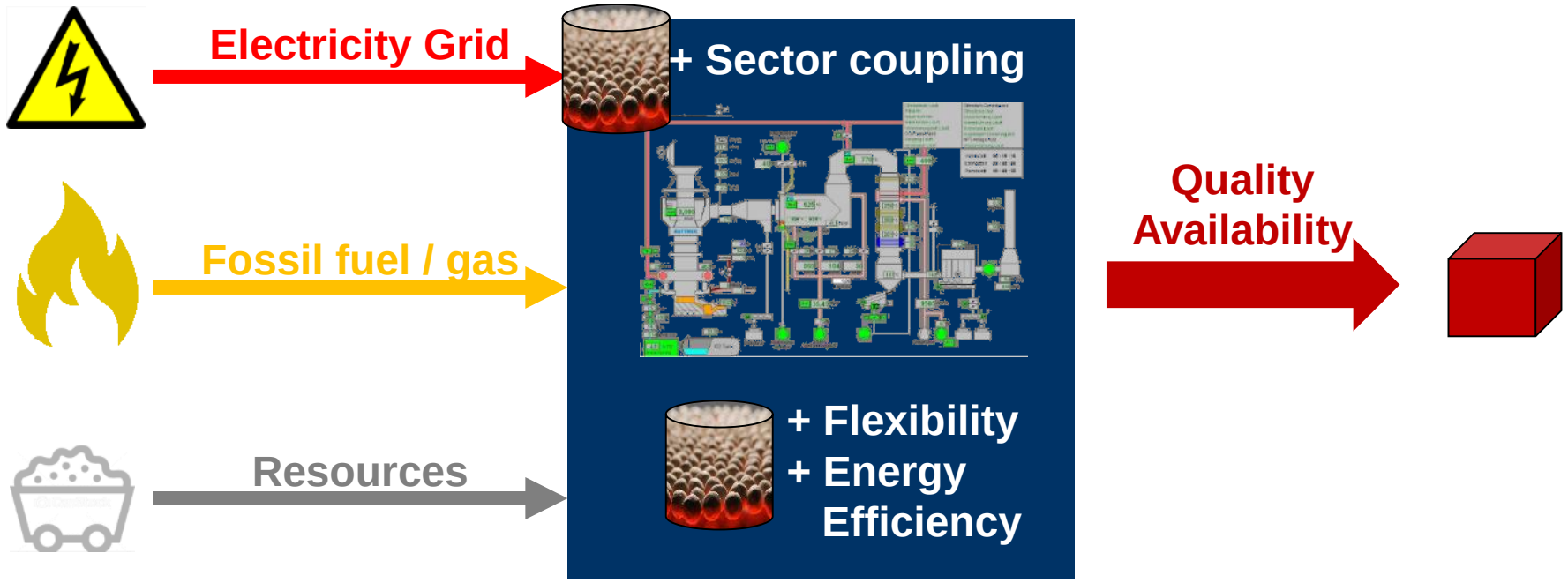

Energy and Resources | **Industrial Process** | **Product**

Electricity and gas price example
(first 2 weeks in June 2022 in Germany)

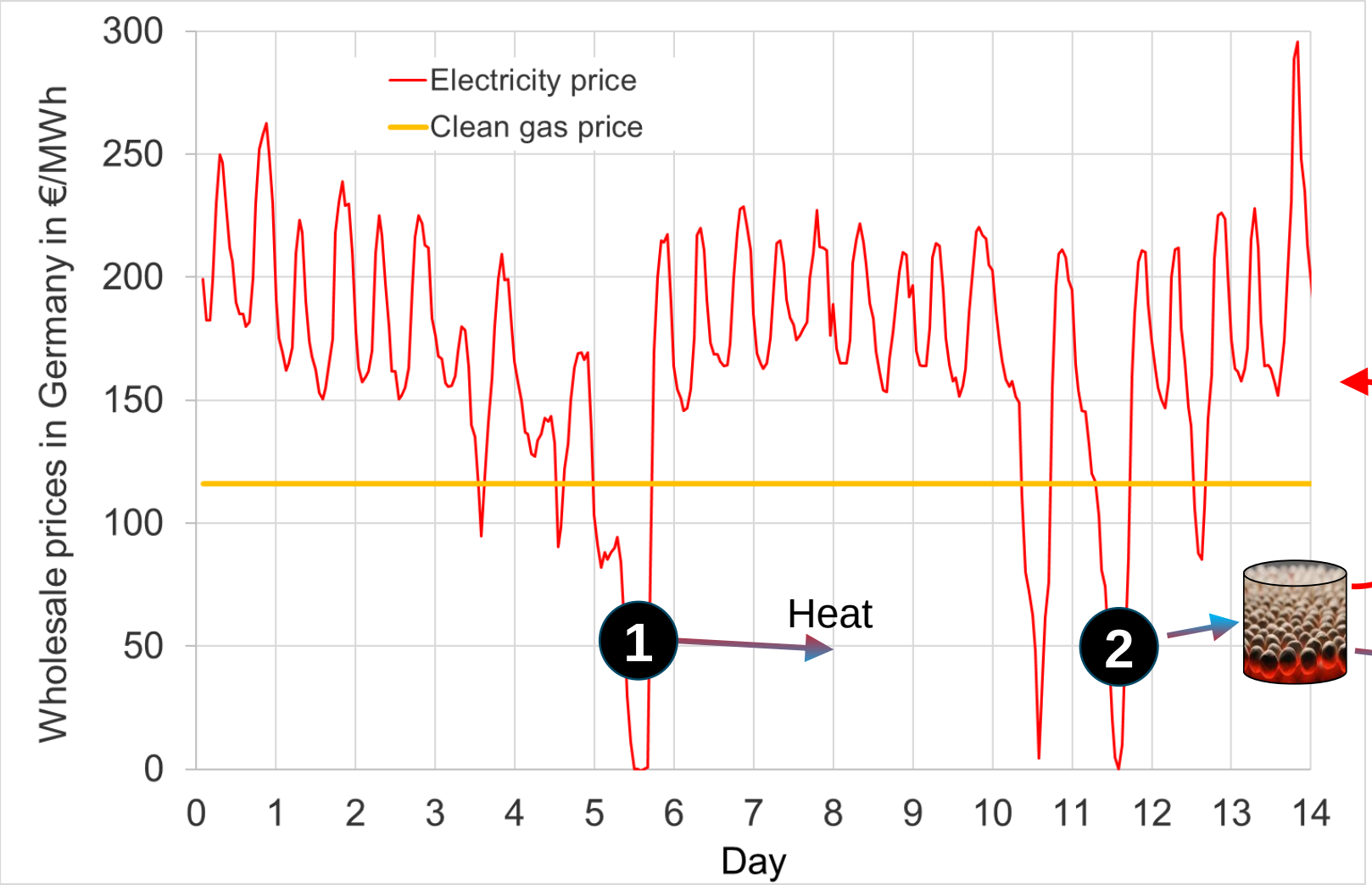

1 Power-to-Heat (**PtH**)

2 Power-to-Heat-to-combined-heat&power (**PtH-CHP with TES**)

Electricity

Heat

Technologies for defossilisation of chemical sites #1

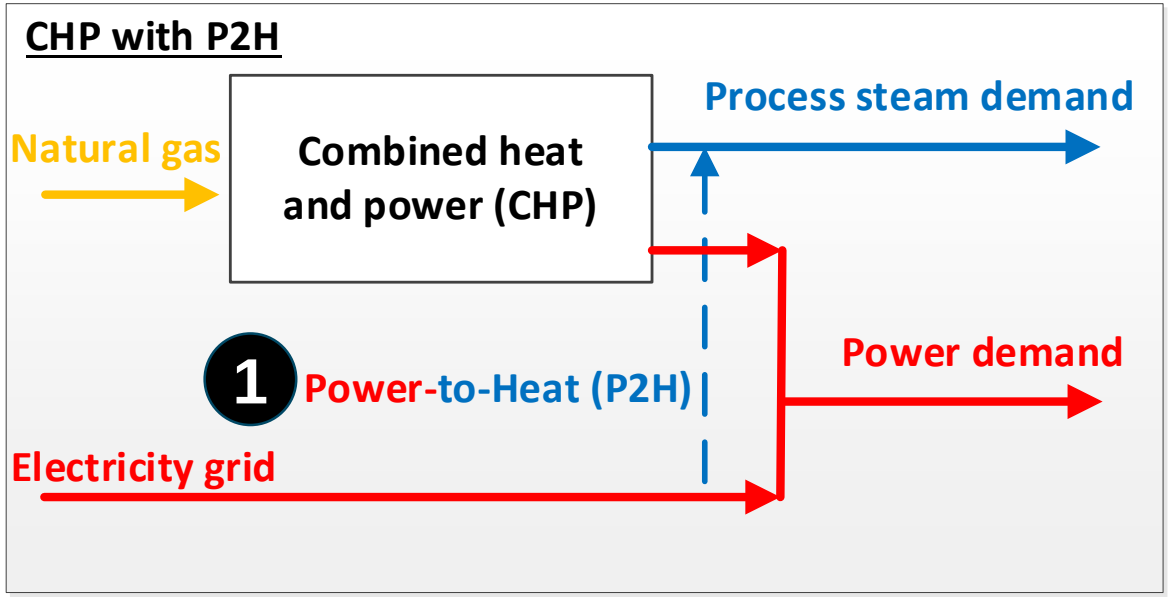

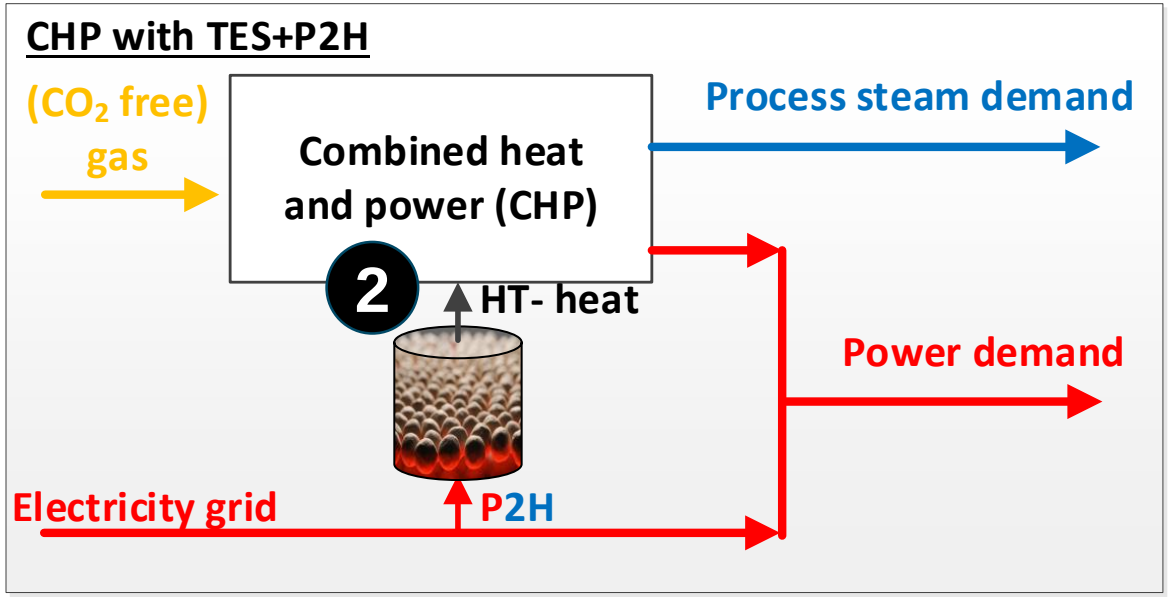

Electrode boiler

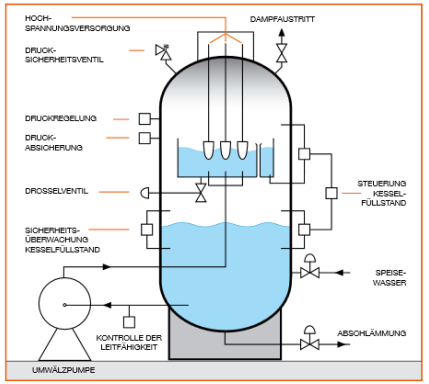

Schematische Darstellung eines Elektrodenkessel zur Dampferzeugung.

Flow heater

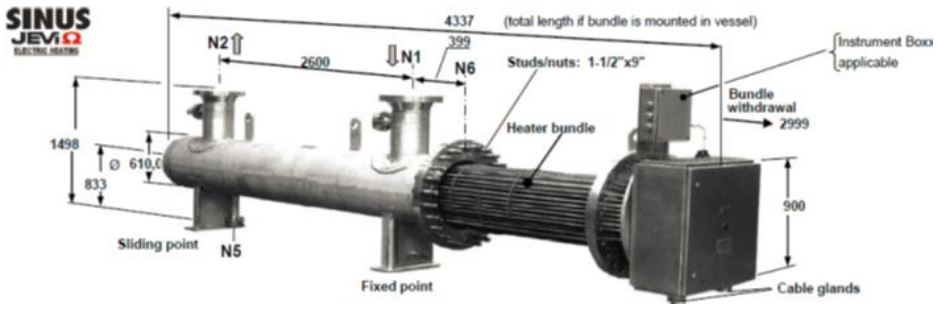

Molten salt thermal energy storage

Technologies for defossilisation of chemical sites #2

	1	2	3
	PtH	PtHtCHP	PtGtCHP
Efficiency	High	High	Low
CAPEX	Low	Medium	High
Storage	No	Yes	Yes
Secured power	No	No	Yes

→ Individual solutions do not cover the demand

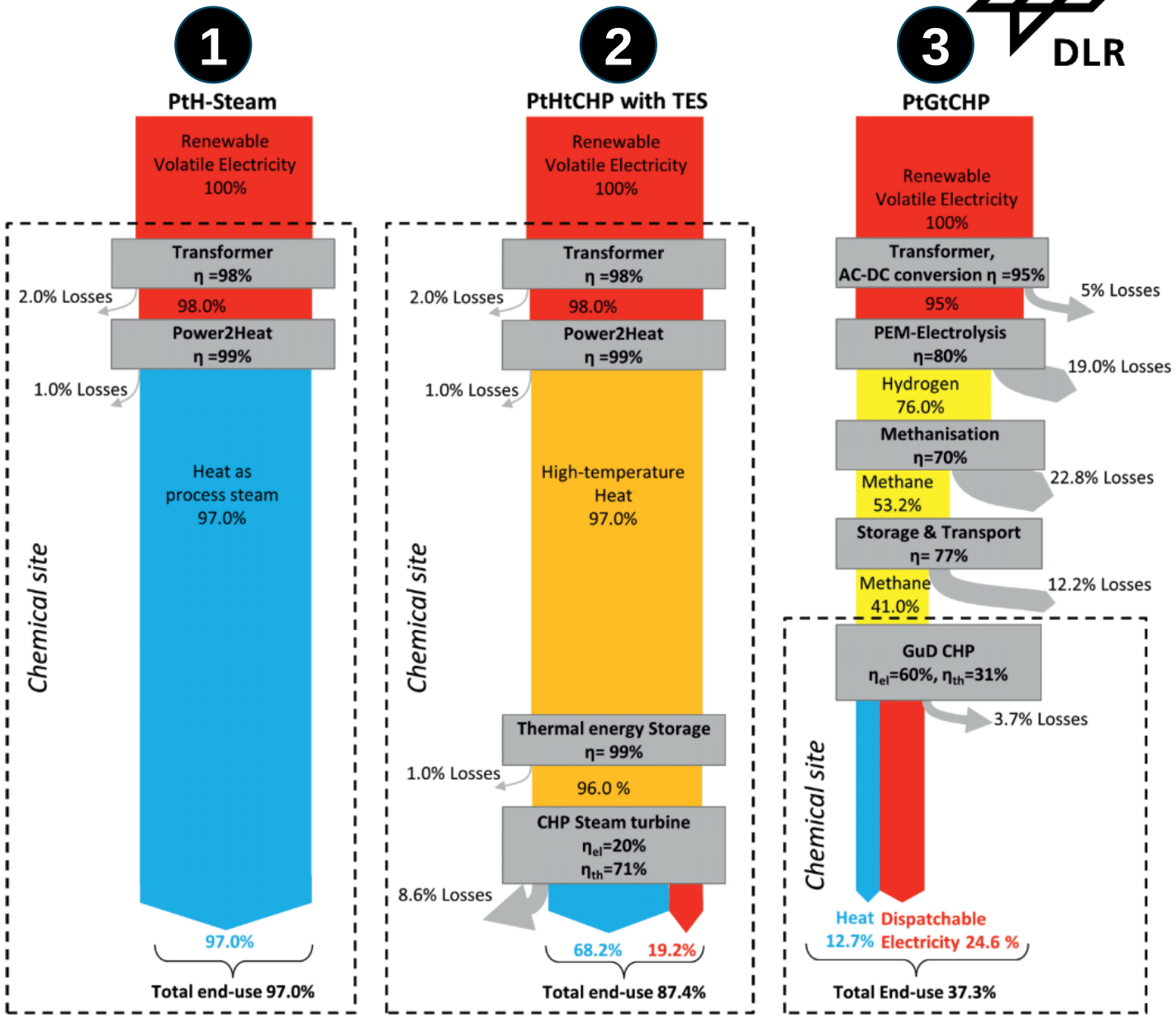

Source: https://doi.org/10.1002/cite.202100164

Project overview: TransTES-Chem

Project goals:

1. Identification of **thermal energy storage** (TES) and PtH solutions to improve the integration of PV and wind at **future chemical site utility infrastructures**
2. Development of thermal energy storage technologies
3. Strengthening the international network for thermal energy storage and Carnot batteries via IEA

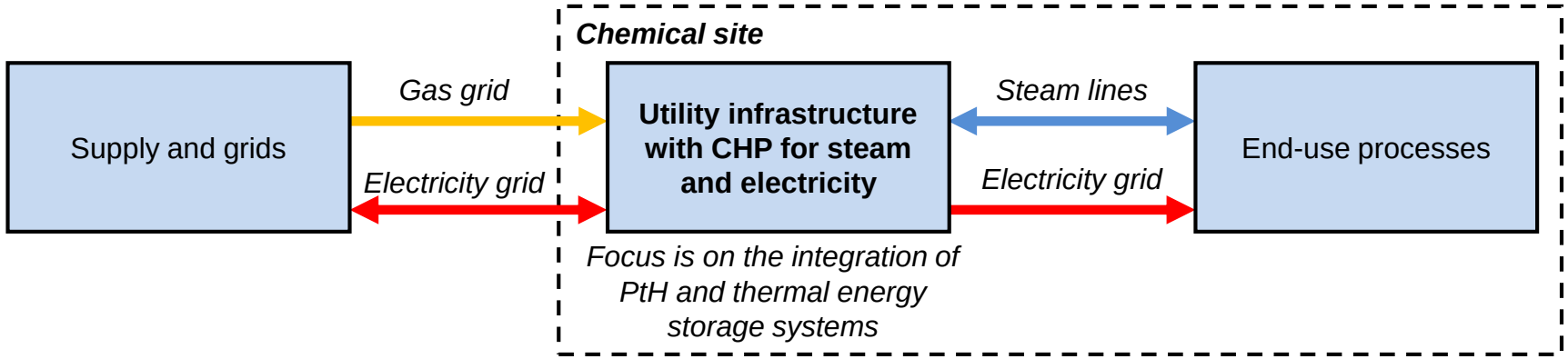

Supported by:

Federal Ministry for Economic Affairs and Climate Action

on the basis of a decision by the German Bundestag

FKZ 03ET1646A-E
01.09.19 – 31.08.23

Ideal-typical utility infrastructure (iUI)

- Foundation for general investigations
- Based on literature and expertise from Currenta and Covestro
- Hourly resolved electricity and steam demand curves
- Electricity, gas and CO_2 prices depending on scenario
- Implemented in Top-Energy® for operational optimization with/without flexibility measures
- Publicly available: https://doi.org/10.1002/cite.202100164

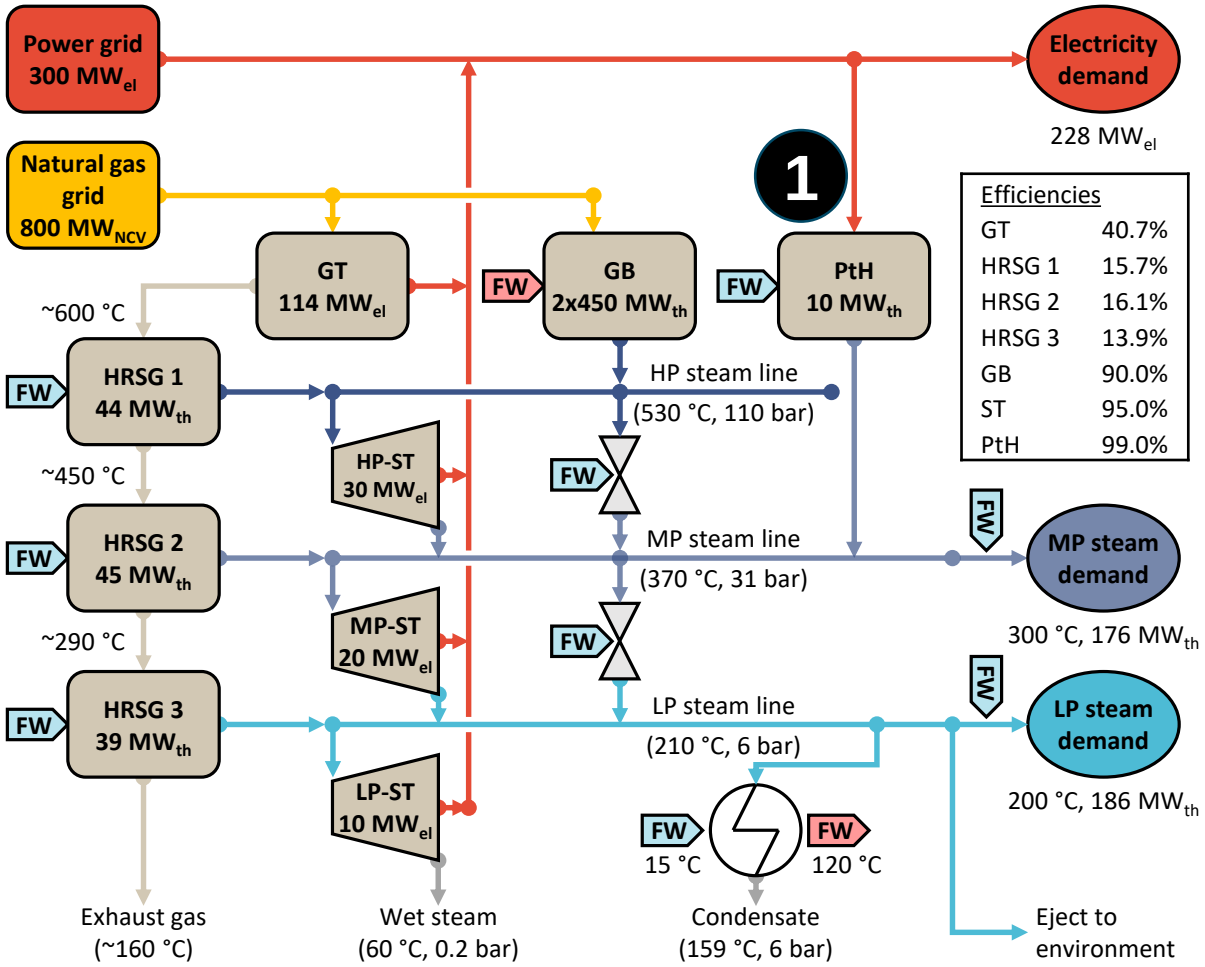

Abbreviations: FW: Feedwater, GB: Gas boiler, GT: Gas turbine, HP: High-pressure, HRSG: Heat recovery steam generator, LP: Low-pressure, MP: Medium-pressure, PtH: Power-to-heat, ST: Steam turbine

Integration of 2-tank molten salt TES into the iUI

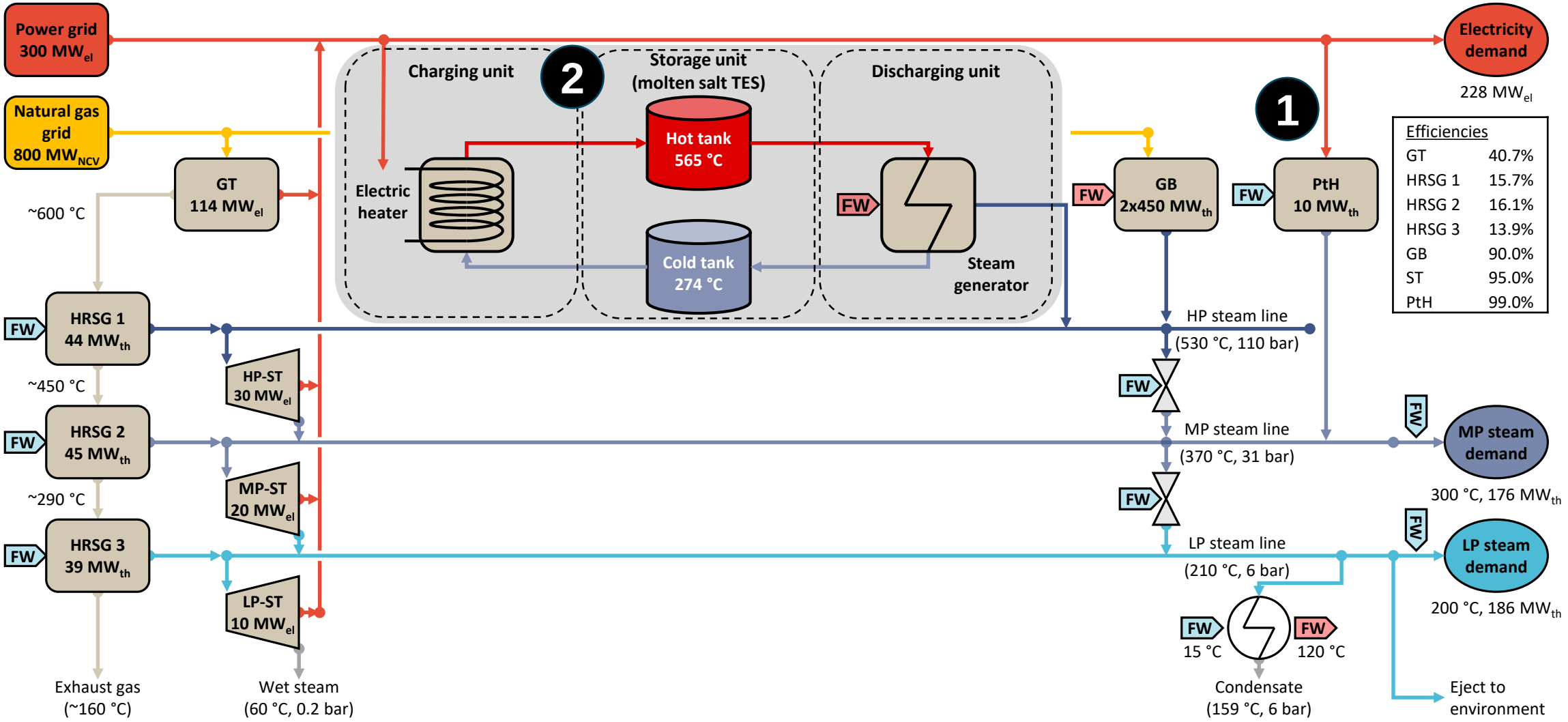

Operating strategy of a storage system in the iUI

Details of the conducted simulation:

- Annual simulation for 2045
  (2 sample days selected for diagram)
- Minimize operational expenditures (OPEX)
- Storage system with:
  - 500 MW charging unit
  - 3000 MWh storage unit
  - 250 MW discharging unit

Results of the study:

- Electricity-to-clean-gas-price ratio *R* determines the TES operation strategy

$$R = \frac{\text{Electricity price}}{\text{Gas} + \text{CO2 price}}$$

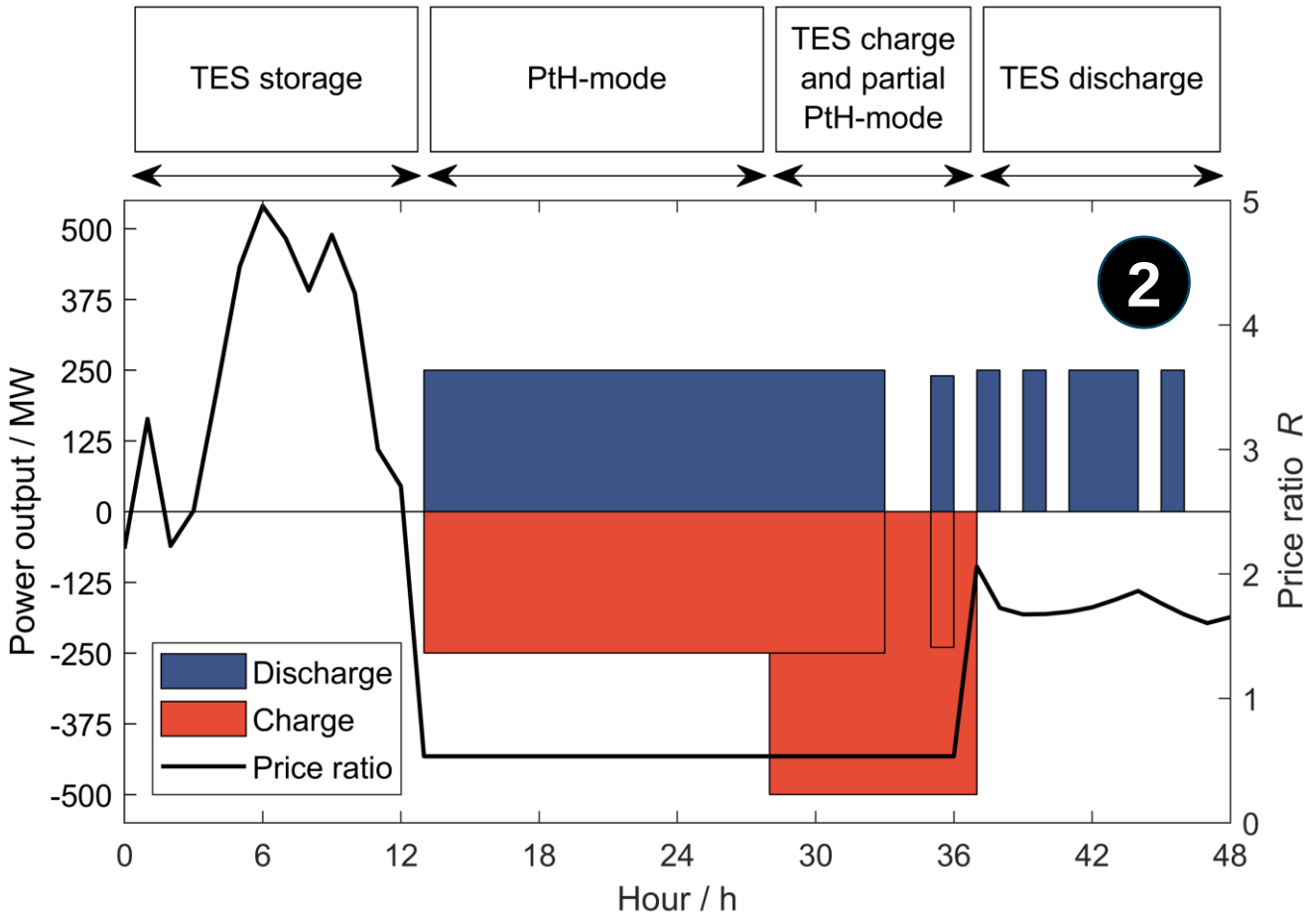

Summary and outlook

- There is more than PtH and P2G
- PtHtCHP with TES as additional solution
  - For the chemical site:
    - OPEX reduction (e.g. 33 % in 2045 for Green-Deal Scenarios)
    - Total cumulative CO_2 reduction (e.g. 21 % for Green-Deal Scenarios)
  - For the grid:
    - Acts like a battery
    - Increases energy volume for sector coupling (compared to PtH)
- More information:
  - Ideal-typical utility infrastructure: see https://doi.org/10.1002/cite.202100164 (open access)
  - Detailed results of PtHtCHP with TES:
    Tomorrow 22.09.22, 12:00 h IRES-conference, session E1, Room 814

Thank you for your attention !

Institute of Engineering Thermodynamics (ITT), Cologne
Email: thomas.bauer@dlr.de; marco.prenzel@dlr.de

Test facility for thermal energy storage in molten salts (TESIS)
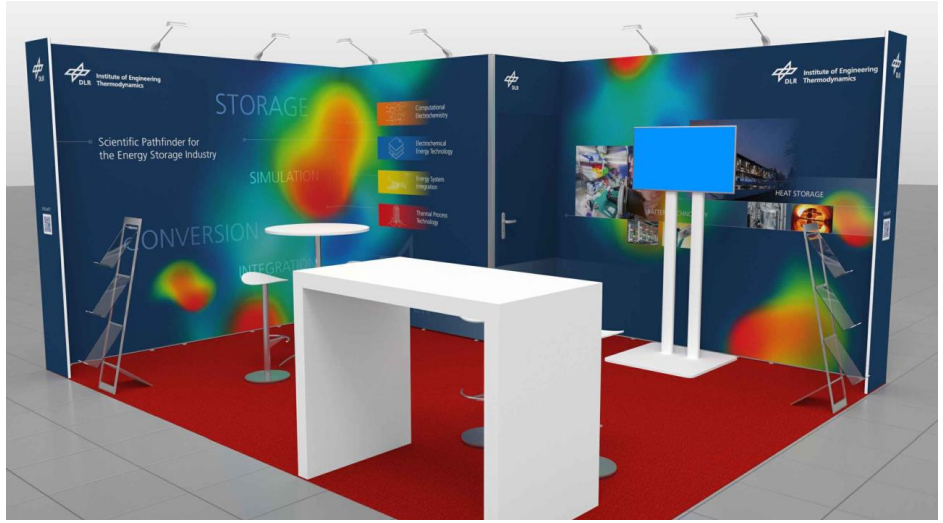
Hall 9, Booth C29