Design of a radiation-tolerant multi-band radio system for new space applications

IEEE Space Hardware and Radio Conference (SHaRC 2020)
Special Session IEEE MTT-Sat-Challenge

Jan Budroweit
German Aerospace Center
Institute of Space Systems

Outline

1. Background and Motivation
2. Design Challenges for Space Application
3. Development and Design Approach
4. Radiation Effects on Critical System Parts
5. System-Level Verification
6. Conclusion and Outlook

Background & Motivation

State-of-the-art SDR system

- A SDR usually define the signal processing in software, implemented on an DSP or FPGA
- RF Front-End mostly untouched and tailored to specific application requirements

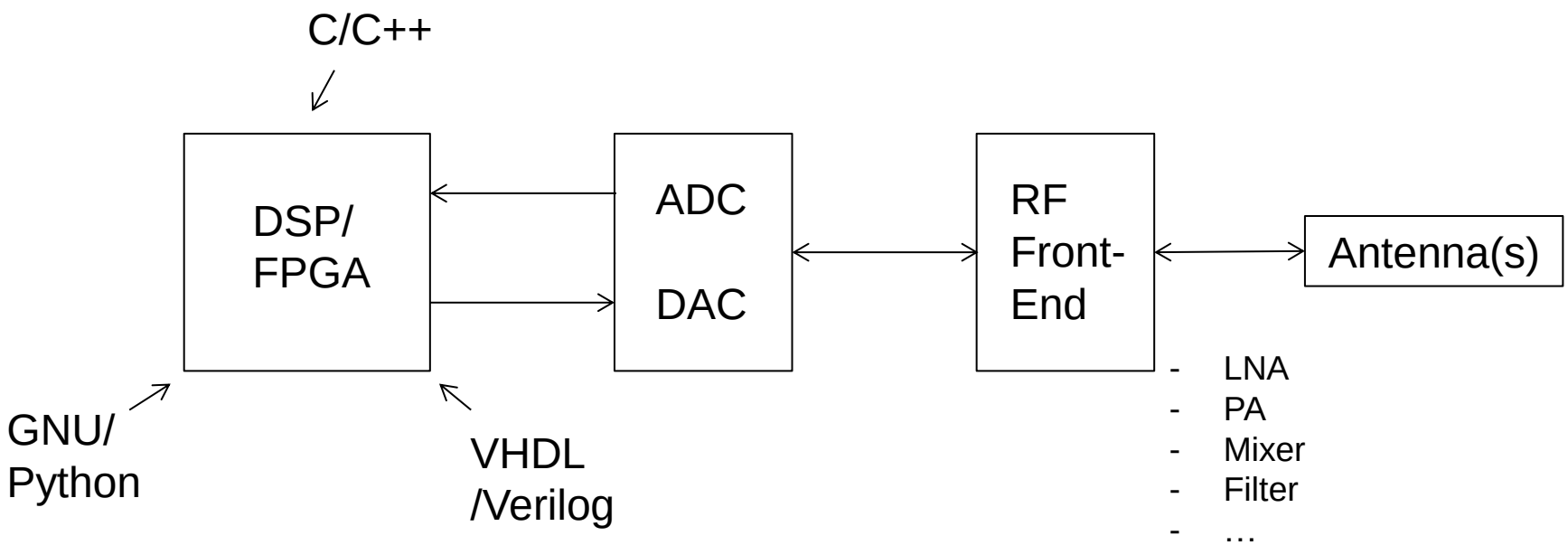

State-of-the-art SDR in space applications

- SDRs are already established
- Commonly used for single applications / units
- Limited in operational frequency band

<u>High reliability:</u>

- High mass and mechanical dimensions
- High costs
- Long lead-times
- High power consumption

<u>Low reliability:</u>

- No radiation effect background
- Low frequency range (< S-Band)
- Non-conformances to mission ICD

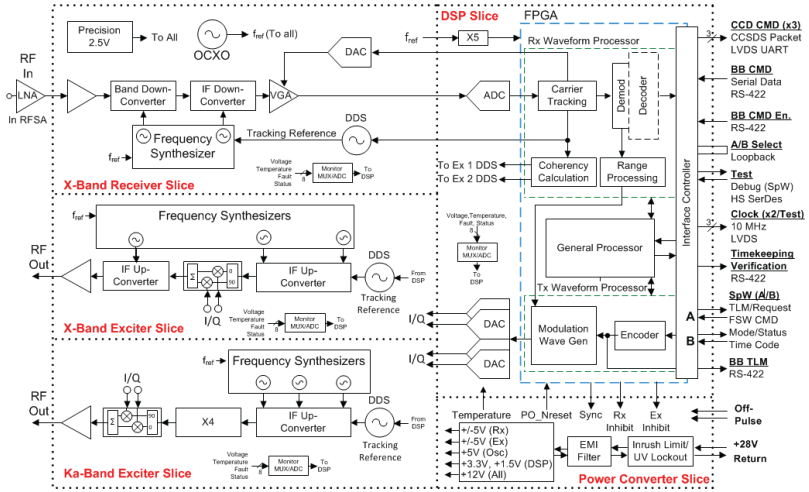

Source: Frontier Radio platform by JHU/APL

A new approach with software-defined RF Front-End

- The highly integrated RFIC (AD9361) combines most of the RF Front-End properties and the ADC/DAC
- Allows a multi-band operation (70MHz-6GHz) reconfigurable by software

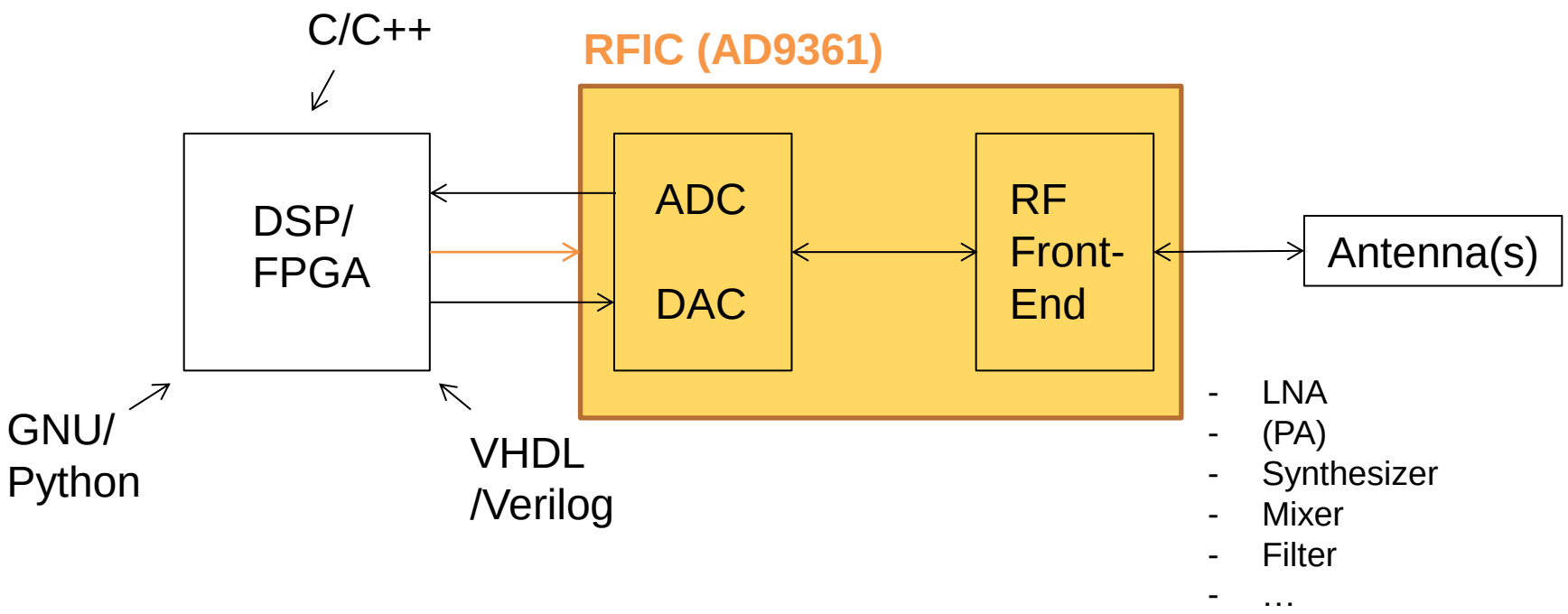

RFIC (AD9361) Overview

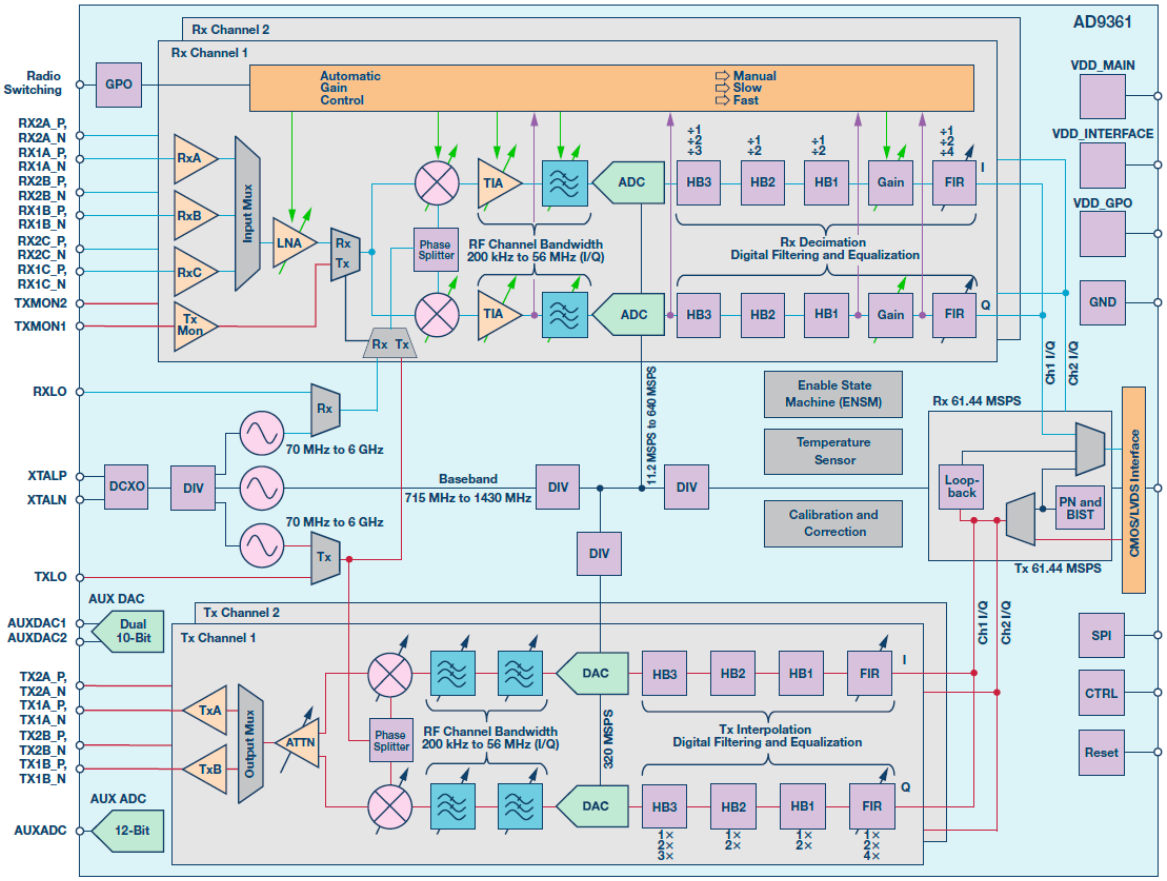

Description	Value/quantity
Operable Frequency Range	70 MHz to 6 GHz
Local Oscillator	Fully integrated fractional N-synthesizers
Local Oscillator Resolution	2.4 Hz max. LO step size
ADC/DAC	12 Bit sigma-delta, up to 640 MSPS
Receivers	2x3 differential input
Adjustable RX-Gain	Manual and automatic gain control
Noise figure	< 2dB @ 800 MHz
Transmitters	2x2 differential outputs
TX-Attenuation	0,25 dB step size, 86 dB range
Tunable channel bandwidth	< 200 kHz to 56 MHz
Type of operation	TDD and FDD
Digital interfaces	CMOS or LVDS
Self-Calibration	DC-Offset filtering, Quadrature-Calibration,
Digital filter design	128 complex taps for Rx and Tx
Enable State Machine	(ENSM) for real time controlling

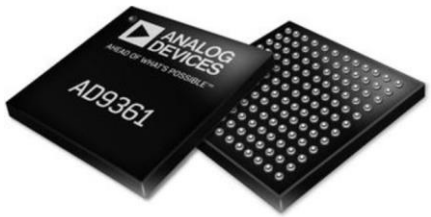

What is the motivation and intention?

- A small, integrated, design/unit that allows simple, fast and cost-efficient re-use and modification
- Independencies from frequency band limitations for TM&TC (VHF, UHF,L S/C-Band, …)
- Scalable design that keeps their specification (size, power consumption and performance)
- Something between low- and high reliability classes

Moreover:

- A single radio platform for multiple applications (two/three/four in one)
- Reconfiguration and operation of multiple applications (e.g. TM&TC or/and ADS-B or/and AIS or/and Spectral Monitoring)

➢ **Better utilization of given resources (size, weight, power, …)**

GSDR
Generic Software Defined Radio System

Design Challenges for Space Application

DLR

Classic Space Missions vs. CubeSats Missions

- So far we had two types of space missions:
  - High-Reliablilty missions (e.g., Telecommunication, Human spaceflight)
  - Low-Reliability missions (e.g., CubeSats mostly driven by Universities)

- Gap between both types is huge
  - Technology level being used (+10 years)
  - Quality assurance
  - Size
  - Costs

- CubeSats mission becoming more interesting for commercial use (e.g., StarLink, OneWeb)

- For NewSpace, COTS is unavoidable

Example: CubeSat missions by type

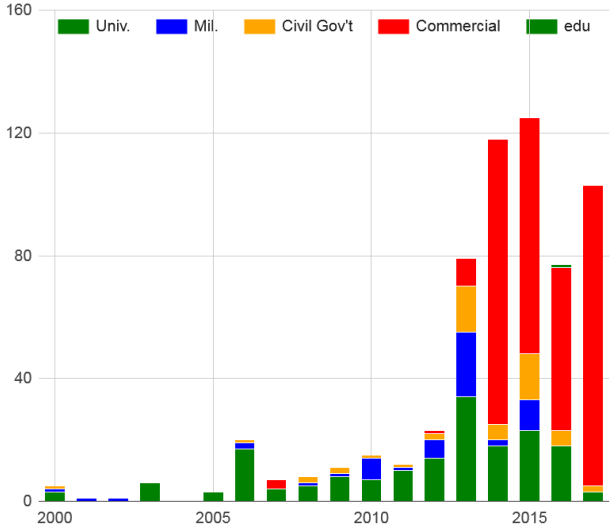

https://sites.google.com/a/slu.edu/swartwout/home/cubesat-database

What to keep in mind when using COTS

STRENGTHS

- functional performance
- latest technologies
- availability on stock
- fast proof-of-concept
- competitive market
- low (initial) costs
- ITAR free

WEAKNESSES

- empirical design approach
- limited technology insight
- testability of devices
- up-screening efforts (RHA, RLAT)
- poor control of supply chain
- profound design expertise required

OPPORTUNITIES

- innovative system designs
- obsolescence strategies
- growing experience
- repackaging
- dual-use as fallback

THREATS

- absence of adequate components
- short product lifecycle (EOL / PCN)
- unpredictable process variability
- residual risk

System Development Challenges for Space Applications

- Making such sate-of-the-art technologies available for space, <u>in a sufficient way</u>, is the biggest challenge due to:
  - Unknown reliability characteristics for space
  - Harsh environment in space
    - Thermal stress
    - Vacuum condition
    - **Radiation (TID, SEE)**
    - Atomic oxygen
- Trade-off between **cost, efficiency and reliability -> <u>Fault-Tolerant Design!</u>**

Development and Design Approach

Fault-Tolerant Approaches for System Development

1. Reliability prediction analysis
2. Analysis of radiation data bases and test data on COTS components with suitable candidates for the GSDR system design
3. Selection of well-known devices with certain product traceability
4. Radiation testing of selected “unknown” devices (e.g. AD9361)
5. RadHard or Rad-Tolerant alternatives
6. System-level mitigation on expected effects:
   - Redundancies, voting
   - Latchup-protection
   - OVP (SET)
   - Configuration scrubbing
   - EDAC mechanisms
   - Usage of watchdogs
   - Safe system-reset (e.g., prevent eFuse setting corruption)
7. Testing on system-level to verify the hardening strategies (e.g. radiation)

Fault-Tolerant System Design (Hardware)

Separation into functional blocks of the system design

- Power regulation
  - Highest priority of reliability
  - If one devices fail, the system fails
  - Certain devices have been already tested under irradiation
  - However, RadHard solutions shall be considered (even if they are expensive and requires more space on the PCB)

- Memory resources
  - Critical if they fail completely (partly loss acceptable, e.g., some blocks are not readable/writeable)
  - Radiation test data available on COTS devices
  - Radiation tolerant NAND flash available
  - Radiation tested DDR3 SDRAM

Fault-Tolerant System Design (Hardware)

- Clock sources
  - Medium critical level (drift in the frequency compensable)
  - Radiation tolerant solutions available
  - Using mil-qualified oscillators, with radiation test data available

- Baseband processor
  - No RadHard solution available for this design requirements
  - Many researches on radiation effects of used Zynq SoC
  - Mil-Spec solution available (packaging etc.)

- RF Transceiver
  - Bottleneck device in the system
  - No radiation test data available
  - No RadHard or Rad-Tolerant alternative available
  - **Own investigations are required**

Fault-Tolerant System Design (Sofware)

- Operational concept
  - Tailored, light-weight, Linux-based ram-filesystem as OS
  - Applications basically described in HDL
  - OS captures and stores the payload application data and performs background operations (e.g. health-monitoring tasks)
  - Re-Configuration by loading application-bitstreams into PL

- Reliability assurance
  - Configuration- and boot files stored into radiation tolerant NAND flash devices
  - Backup partitions and redundant memory resources for sensitive data
  - Multi-Boot operation with fall-back solutions
  - Complex SW-architecture for system-health-monitoring (watch-dogs, SEL detection, configuration scrubbing, …)

GSDR
Generic Software Defined Radio System

Radiation Effects on Critical System Parts

DLR

Source of Radiation

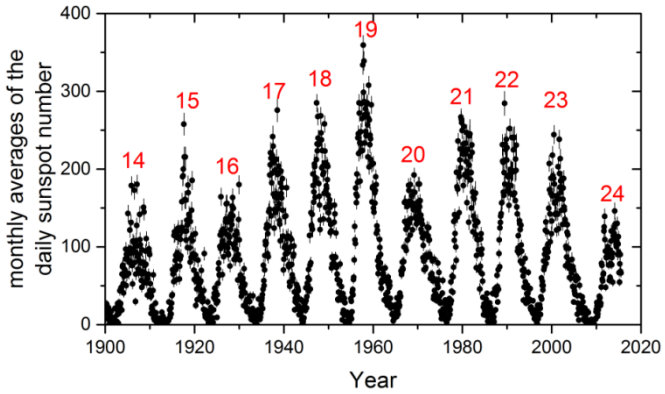

- The Sun
  - High dynamic magnetic field
  - Change of magnetic field every 11 years
  - Source and Modulator for Radiation
  - Solar Flares
  - Coronal Mass Extraction (100B Tons of Plasma)
  - Protons and Heavy Ion Particles, x-ray and gamma ray

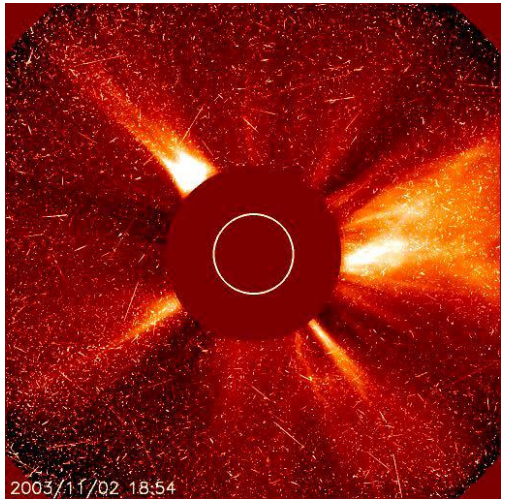

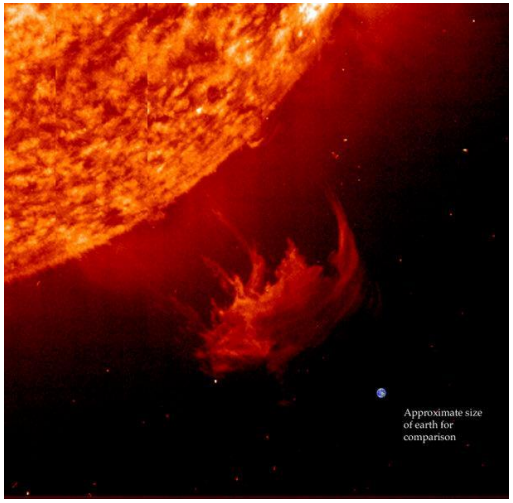

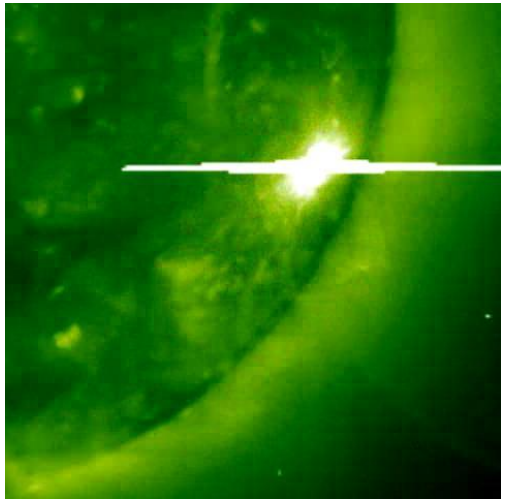

Source of Radiation

- Galactic Cosmic Rays
  - 87% Hydrogen, 13% Helium, 1% Heavy Ions (e.g., Xenon)
  - Very High Energies (>10E20 eV)
  - Isotropic direction (comes from everywhere)
  - Lower Energies are shielded by Earth magnetic field
  - Shielding depending on the sun activity
  - Mainly Heavy Ion, less Protons
- Radiation belts of Earth
  - Trapped Protons
  - LEO missions are affected

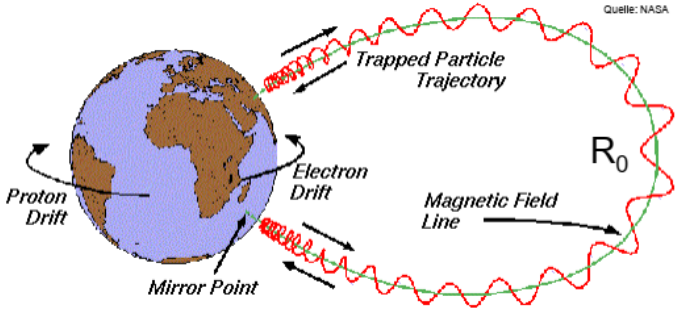

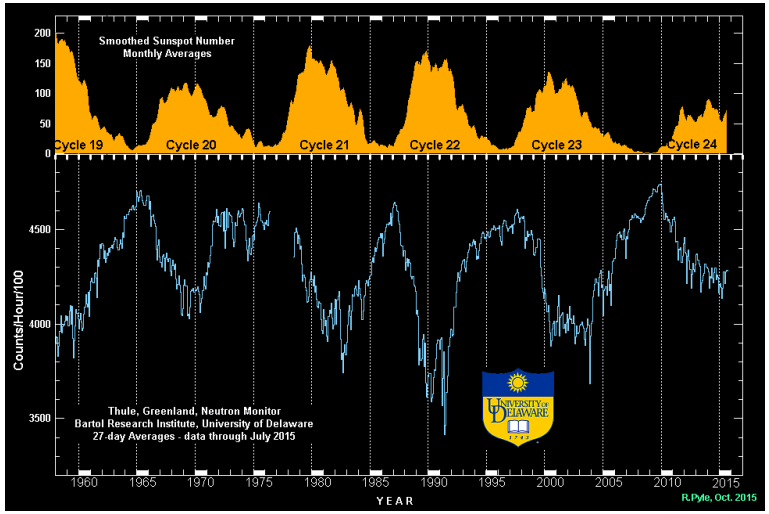

Radiation Effects

Radiation Effects

Displacement Damages

Ionization

Accumulated Dose Effects

Single Event Effects

Accumulated Dose Effects

- Often calls Total Ionizing Dose (TID) effects
- Mainly affects the Isolator (SiO2)
- Metals and Semiconductors are immune
- Optical effects (blurred lances)
- Drifts in the devices parameters (e.g. output voltages or oscillator frequency)
- Shielding is effective

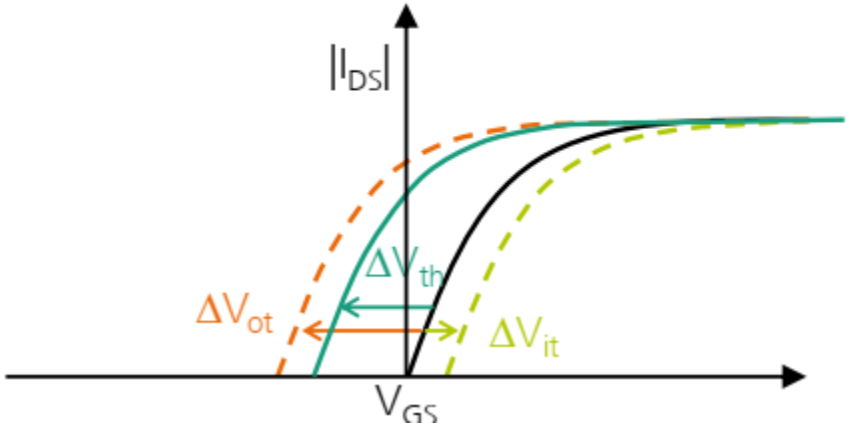

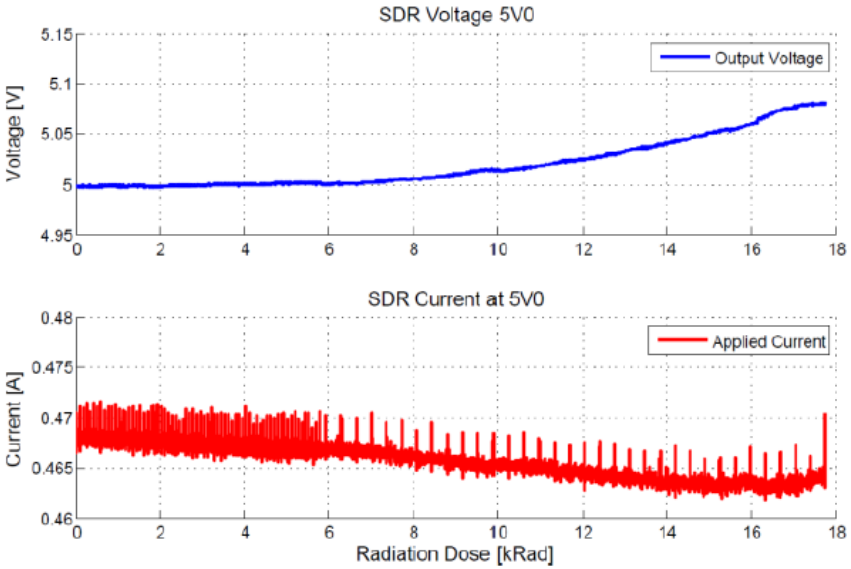

Single Event Effects

- Particle Effects in the semiconductor
- Sources: Electrons, Neutrons, Protons and Heavy Ions
- Particle Energy is disposed to the semiconductor
- Destructive and Non-Destructive SEEs
  - SEL, SEB, SEGR
  - SEU/MBU, SET,

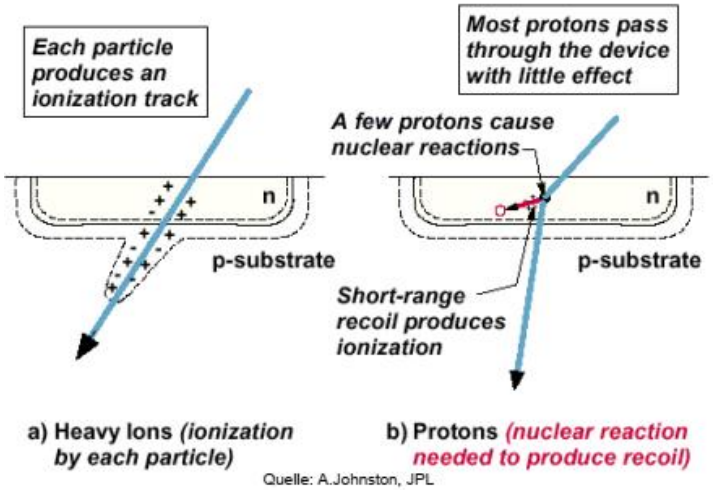

Quelle: A.Johnston, JPL

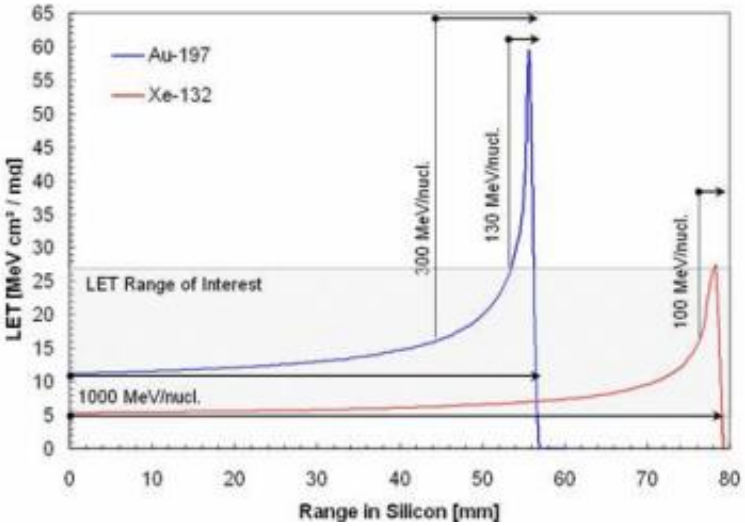

GSDR
Generic Software Defined Radio System

Radiation Testing on AD9361

DLR

Reminder: AD9361 Overview

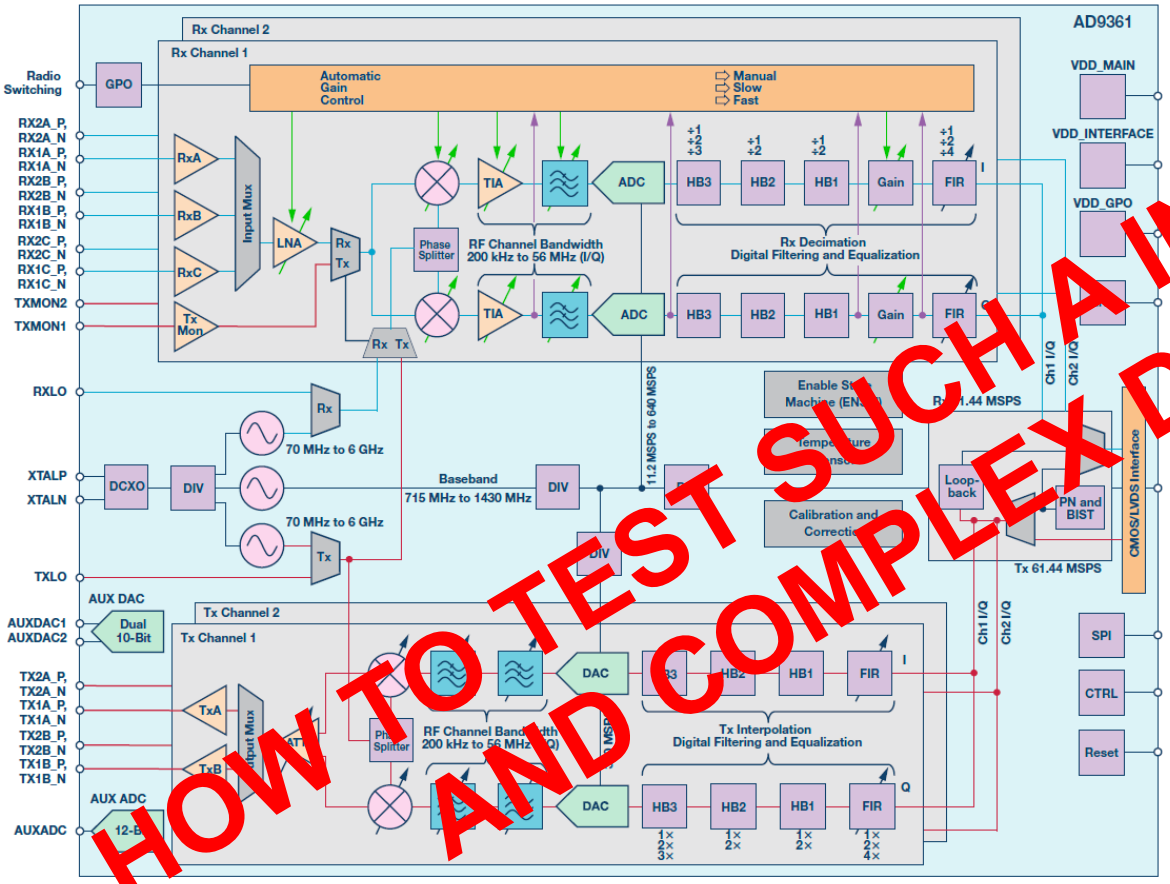

Description	Value/quantity
Operable Frequency Range	70 MHz to 6 GHz
Local Oscillator	Fully integrated fractional N-synthesizers
Local Oscillator Resolution	2.4 Hz max. LO step size
ADC/DAC	12-Bit sigma-delta, up to 640 MSPS
Receivers	2x3 differential input
Adjustable RX Gain	Manual and automatic gain control
Noise figure	< 2dB @ 800 MHz
Transmitters	2x2 differential outputs
TX-Attenuation	0,25 dB step size, 86 dB range
Tunable channel bandwidth	< 200 kHz to 56 MHz
Type of operation	TDD and FDD
Digital interfaces	CMOS or LVDS
Self-Calibration	DC-Offset filtering, Quadrature-Calibration,
Digital filter design	128 complex taps for Rx and Tx
Enable State Machine	(ENSM) for real time controlling

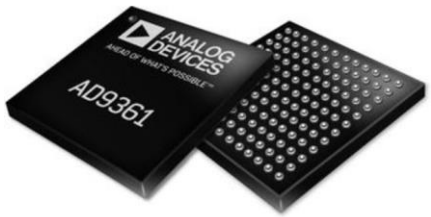

HOW TO TEST SUCH A INTEGRATED AND COMPLEX DEVICE ?

DLR

Total Ionizing Dose Effects Testing

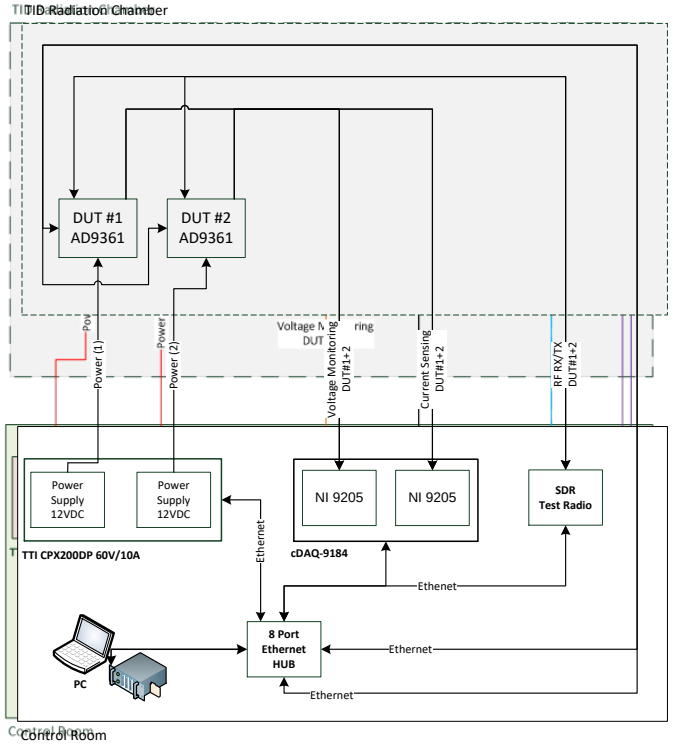

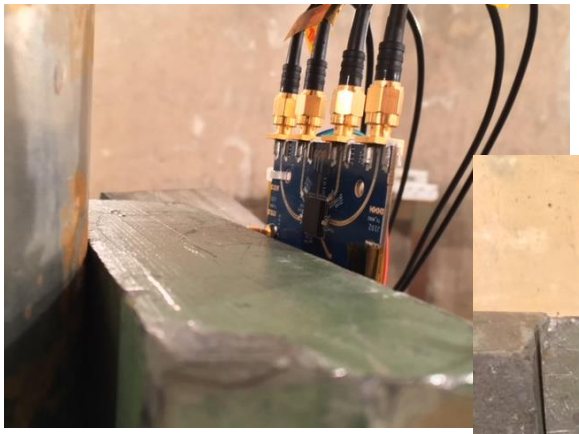

- AD9361 is installed on daughterboard (blue) and is not surrounded by other sensitive devices (good DUT isolation)
- Carrierboard interfaces DUT and allows data access and controlling (shielded by lead bricks)

TID test parameters

- Co-60 Source of HZB (Potsdam) and X-Ray machine from CERN
- Three tests in total
  - 2015:
    - Target dose: 25krad(SiO2)
    - Dose rate: 0.5 to 3.5 krad(SiO2)/h
    - Samples: 1
  - 2018:
    - Target dose: 200krad(SiO2)
    - Dose rate: 11.5 krad(SiO2)/h
    - Samples: 2
  - 2019: X-Ray Test
    - Target dose: 80Mrad(SiO2)
    - Dose rate: 4.1 Mrad(SiO2)/h
    - Samples: 2

TID test procedure

Two test configurations are considered:

1. During irradiation a continuous live test is performed in which a sinewave is transmitted and received on a specific transceiver configuration (e.g. carrier frequency, sample rate etc.).
2. In frequently intervals of approx. 15krad(Si) a detailed performance test is executed to evaluate the function of the device and degradation effects in different stages.

TID performance test (1)

- Current conditions under different ENSM stages

Analysis of current conditions for different state machine modes to evaluate general degradations (e.g., increased current level).

- Automatic gain control performance

Evaluation of the receiver's automatic gain control (AGC) by transmitting a sinewave on different power levels (attenuated by the reference transmitter output) to the DUT. The receiver AGC selected gain levels and the digitized signal strength are recorded.

- Manual gain

Transmission of a fixed, low power sinewave tone to the DUT receiver input and progressively increase of the manual gain of the receiver (in 1dB steps) to evaluate the digitized signal strength.

TID performance test (2)

- RX filter frequency response

A narrow receiver RF filter bandwidth of 200kHz is selected. A fixed amplitude sinewave is transmitted on different carrier frequencies inside and outside of the filter bandwidth (in 10kHz steps). The receiver's gain is fixed to avoid overdrive effects. The detected peak in the frequency spectrum of the receiver is captured and recorded for every selected carrier frequency. The results show the bandwidth shape and frequency response.

- TX attenuation

The reference receiver is set to a fix gain configuration. The DUT transmits a sinewave tone on a dedicated carrier frequency and adjusts the TX attenuation in 2dB steps to evaluate the attenuation behavior under radiation. The signal received by the reference transceiver is digitized to detect the expected peak of the signal in the frequency spectrum for each selected attenuation value of the DUT's transmitter.

TID performance test (3)

- TX intermodulation

A 1MHz and 2MHz sinewave tone are transmitted on different carrier frequencies to the reference receiver device. With the increased output power, the reference receiver observes and records intermodulation products (3rd and 5th order) without being affected by overdriving the receiver's amplifier. The intermodulation distances (IMD) are then evaluated.

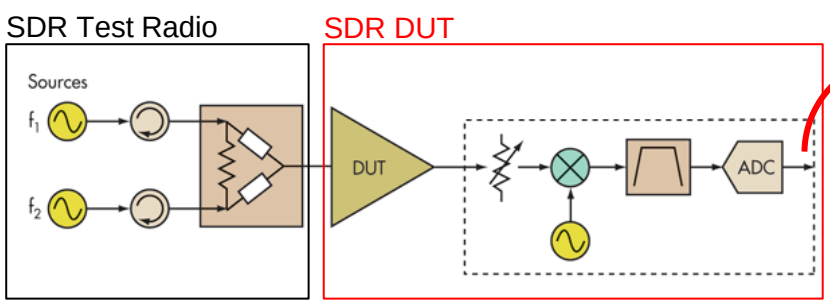

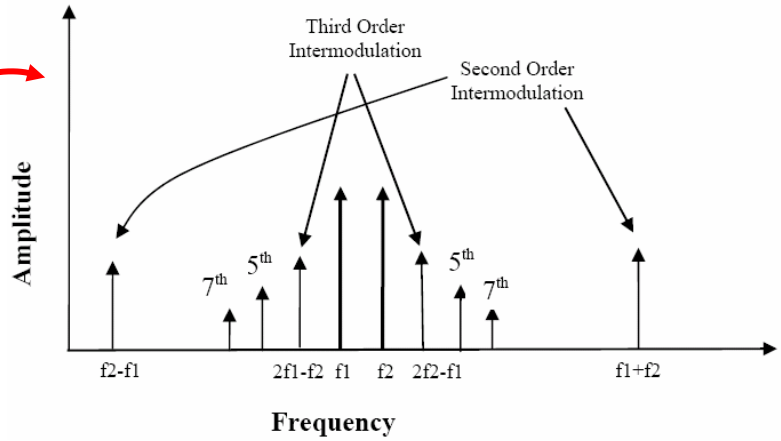

TID performance test (4)

- TX local oscillator leakage

A constant sinewave is transmitted on different carrier frequencies and is received by a fix-gain configured reference receiver. With the captured IQ data, the signal power on the expected frequency and the DC power level is calculated. The difference between those values is defined as local oscillator leakage (LOL).

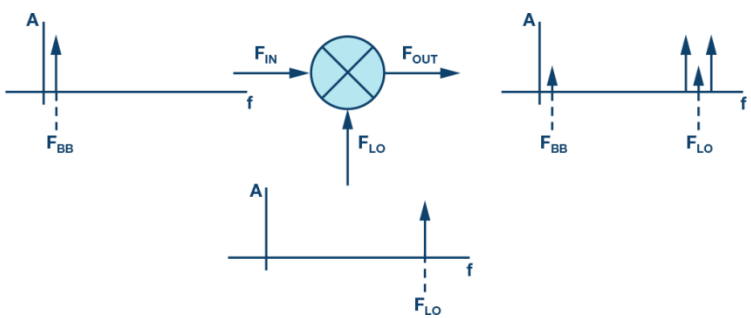

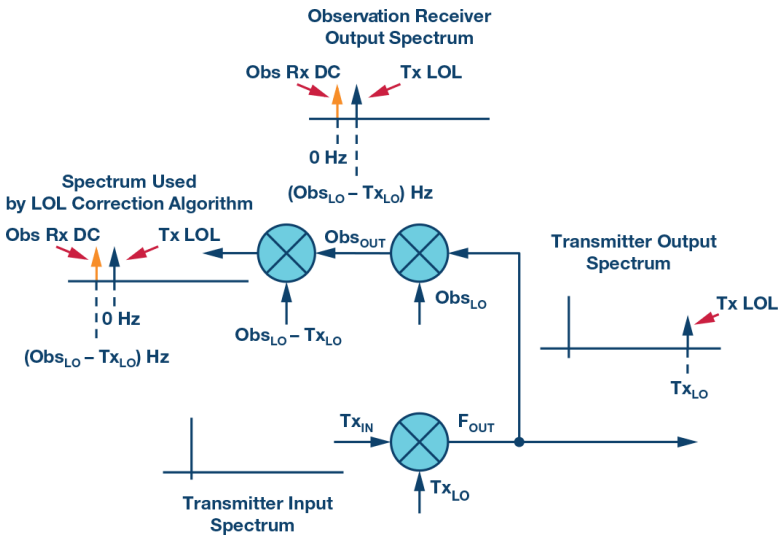

Source:
https://www.analog.com/en/analog-dialogue/articles/transmit-lo-leakage-lol-an-issue-of-zero-if-that-isn-t-making-people-laugh-out-loud.html#

Current conditions for different ENSM modes

- Different ENSMs observed
- 0krad(Si), 95krad(Si) and 180krad(Si)
- No changes in current levels observed
- Change sequences drifting, this is not based on radiation effects

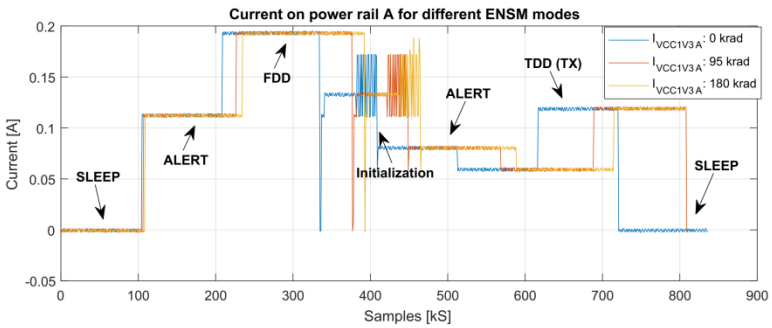

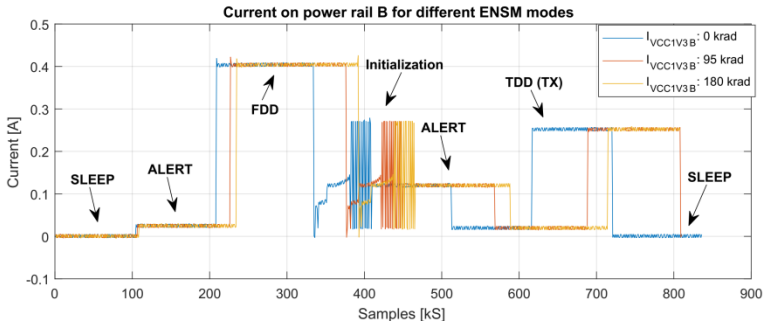

RX AGC performance

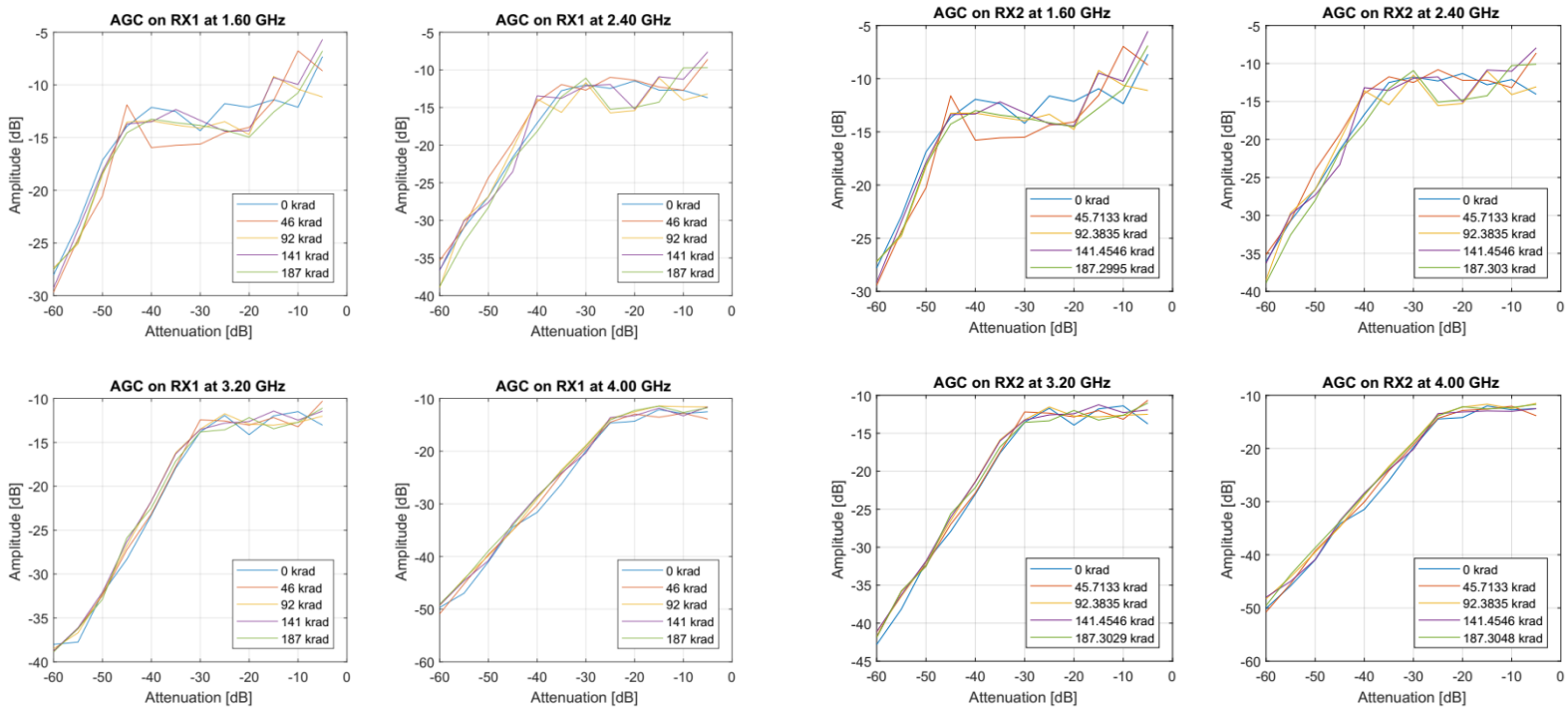

- The maximum level of amplification and the amplitude vs. attenuation function depends on the narrow RF matching of the FMCOMMS-2 board.
- In all cases, we did not observed the AGC gain control does not deviate critically with increased TID level.

RX manual gain

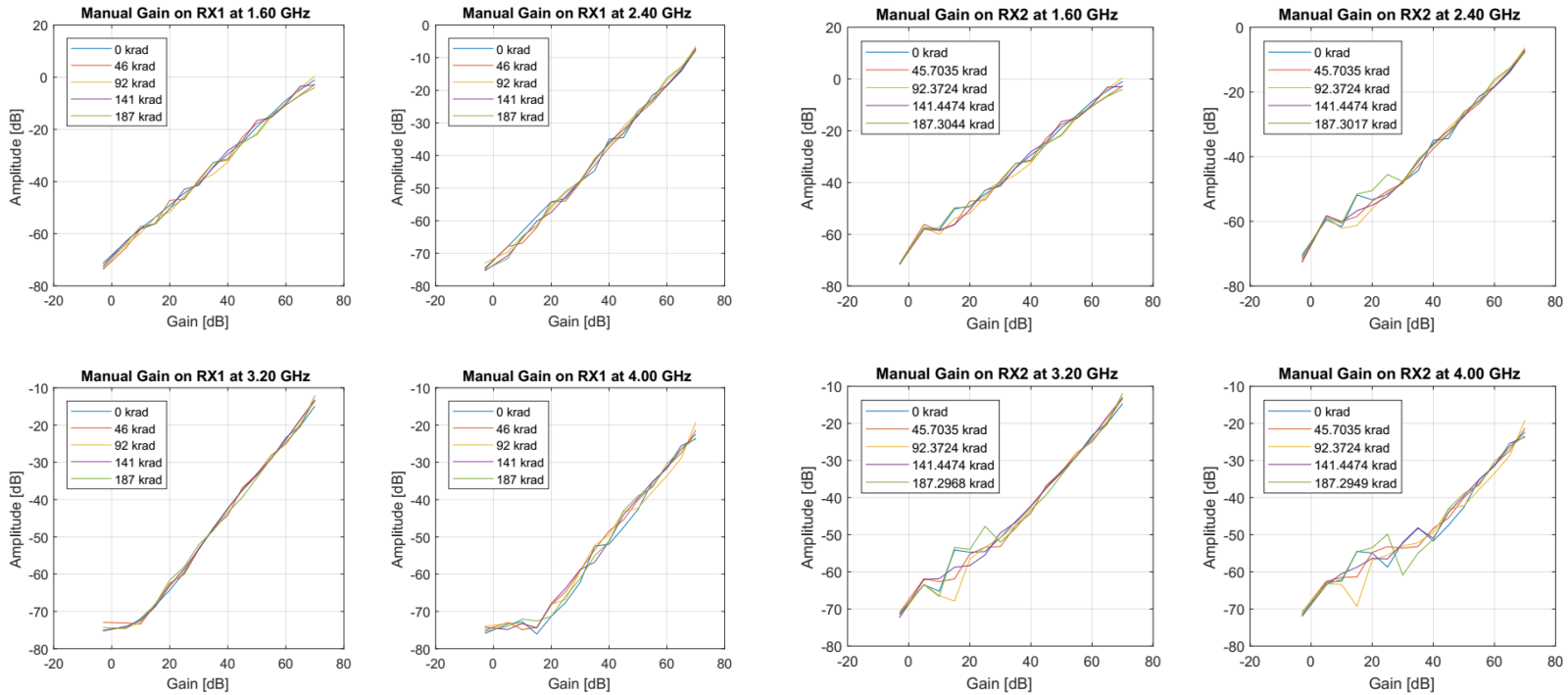

- We observed, as already seen for the AGC, the gain factor of the amplification stage in the receiver is not affected by radiation
- For RX2 there is a slightly different performance in low power levels (deviating amplitudes) which is expressed by mismatches in the front-end

RX filter and bandwidth response

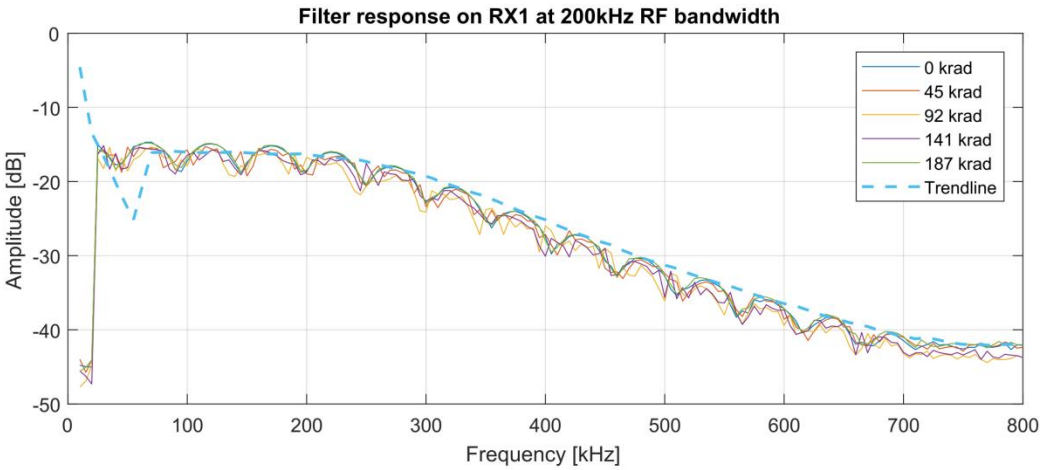

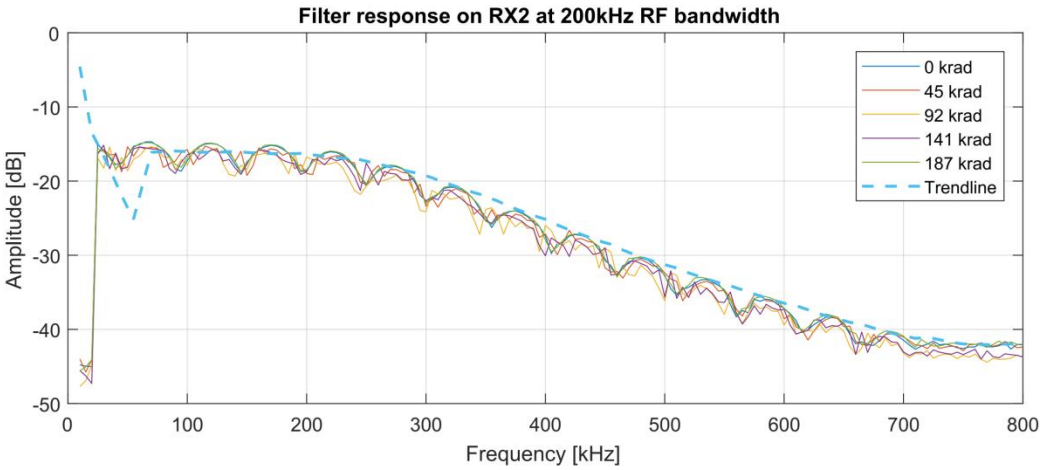

TX attenuation

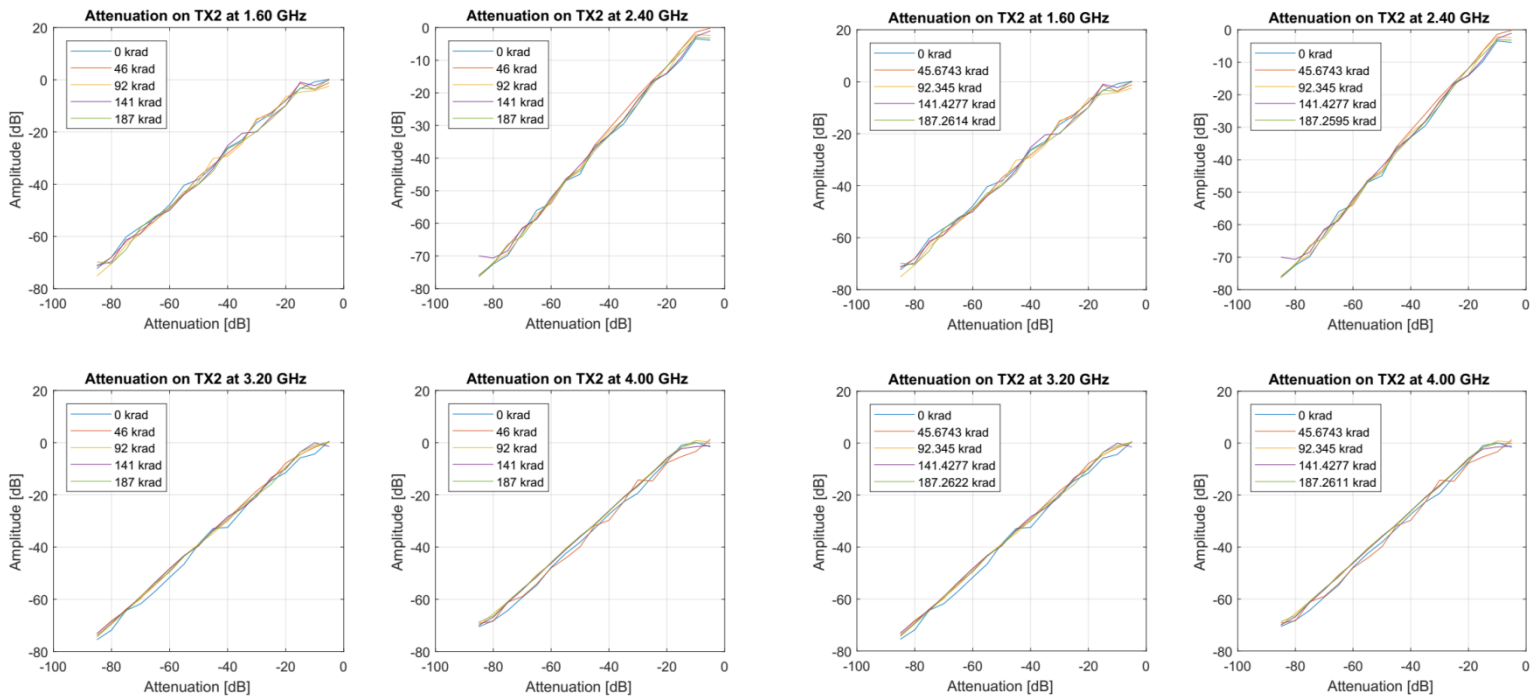

- The attenuation shows an almost linear function for any selected carrier frequency and is not being affected by the exposed radiation dose.

TX intermodulation

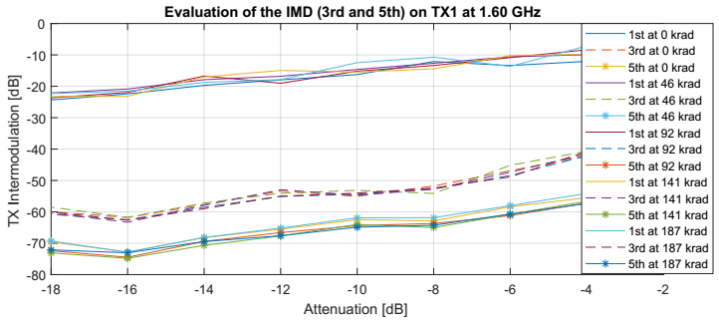

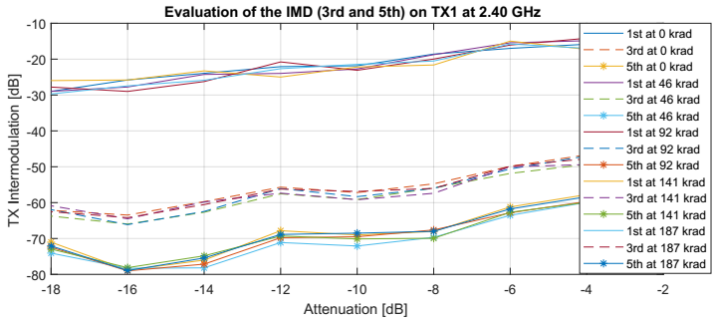

- The peak level for the fundamental tone, the 3rd and the 5th intermodulation product are shown vs. the selected TX attenuation on a carrier frequency of 1.6GHz and 2.4GHz.
- As can be seen, the IMD for the 3rd and the 5th peak to the fundamental tone do not deviate with increased TID level.

TX local oscillator leackage

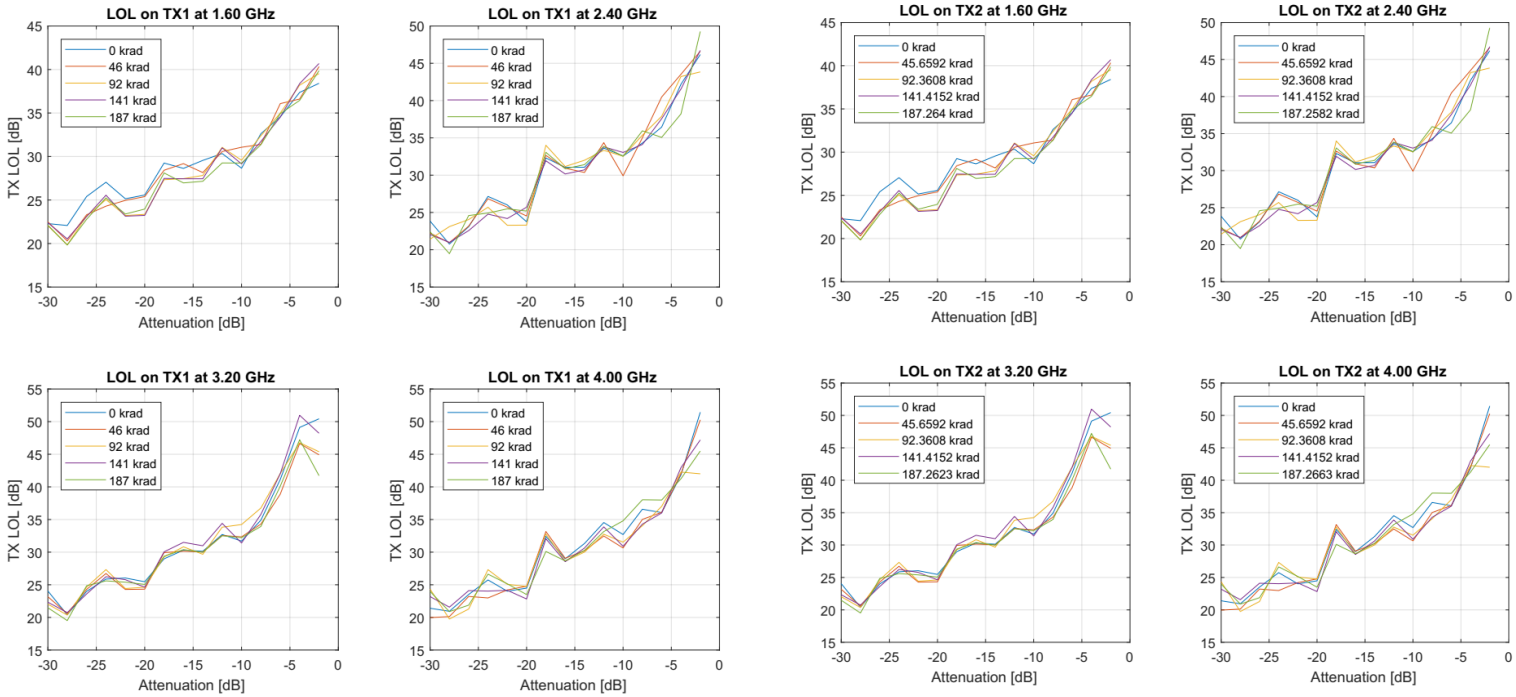

- To evaluate the LOL of the DUT's transmitter, the distance between the received DC signal level and the expected transmitted sinewave level is calculated.
- We did not observe critical changes in the function depending on the obtained TID

Single Event Effects Testing

- Single Event Effects testing performed under Proton and Heavy Ion
  - Proton: up to 200MeV (@KVI, Groningen, NL)
  - Heavy Ion: up to 65 MeV.cm²/mg (@ UCL, Leuvain la neuve, BL)
- Test Board has been developed for this puropose
- AD9361 was required to “open” the device package
- Two Samples tested

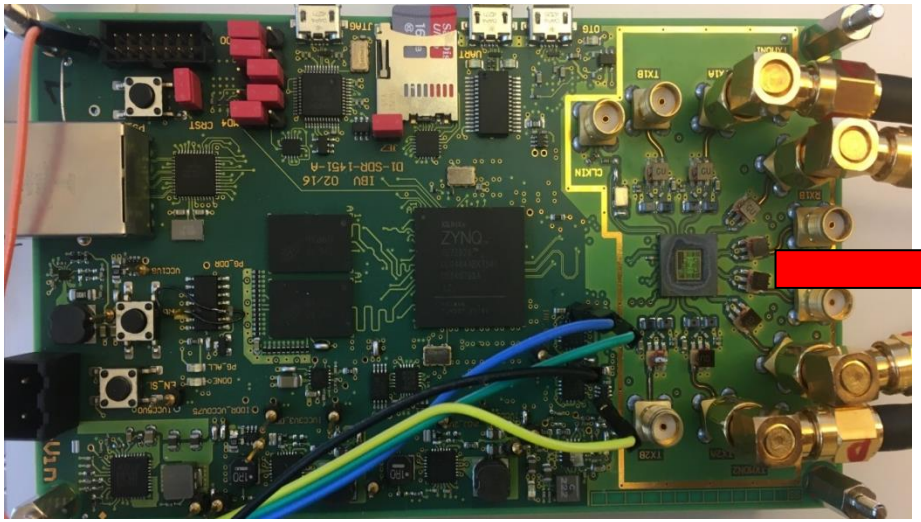

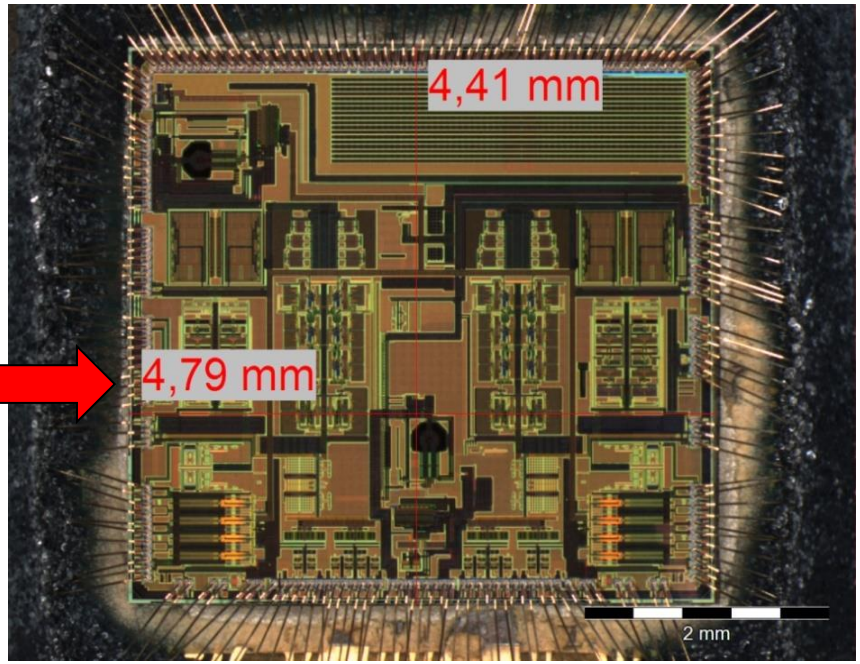

SEE Test Procedure

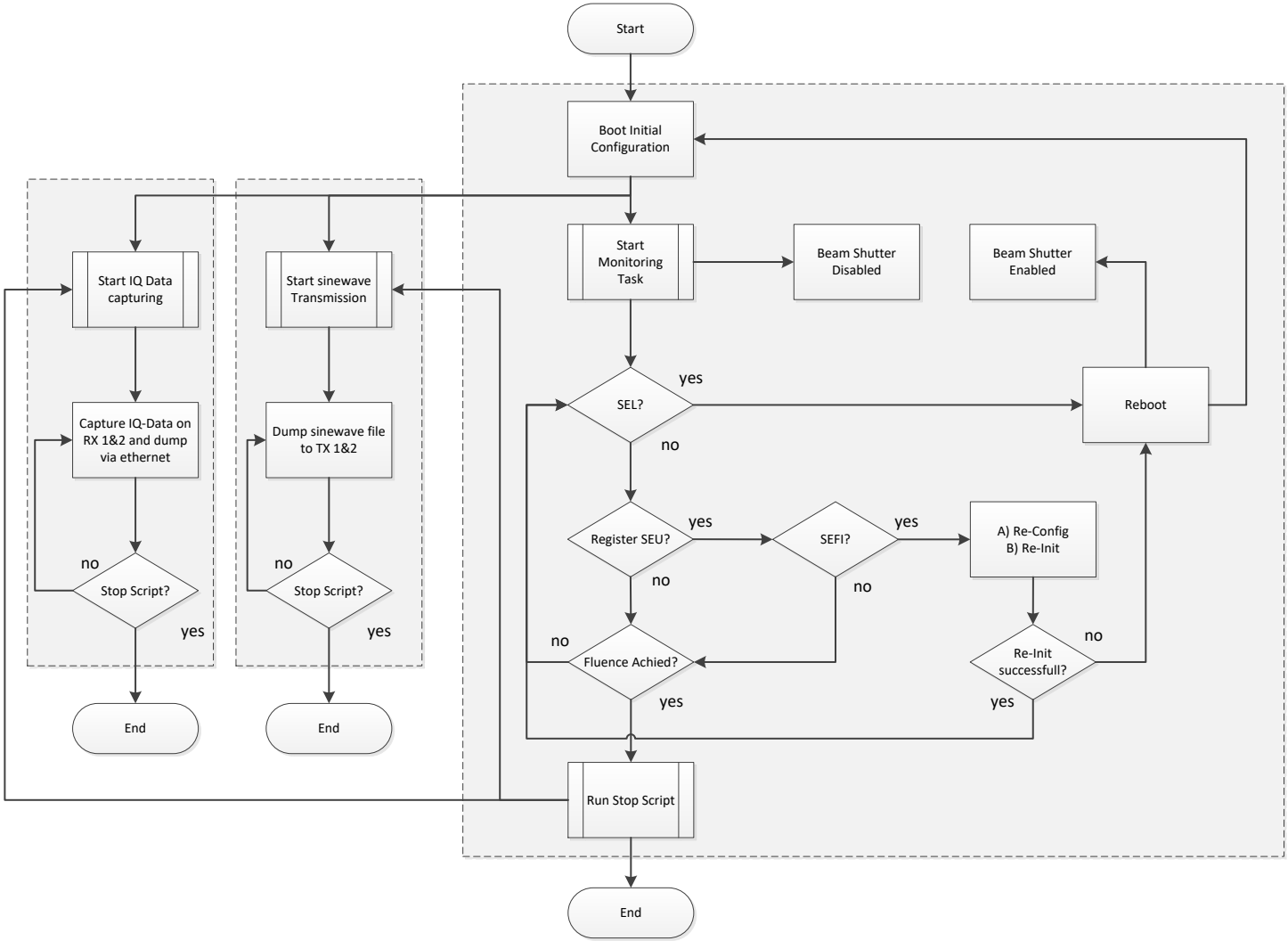

Single Event Effects Testing

- Various types of errors
  - SELs
  - SEUs, MBU in functional register configuration
  - SEFIs that required a re-configuration or re-initialization
  - IQ Data corruption (soft and hard)

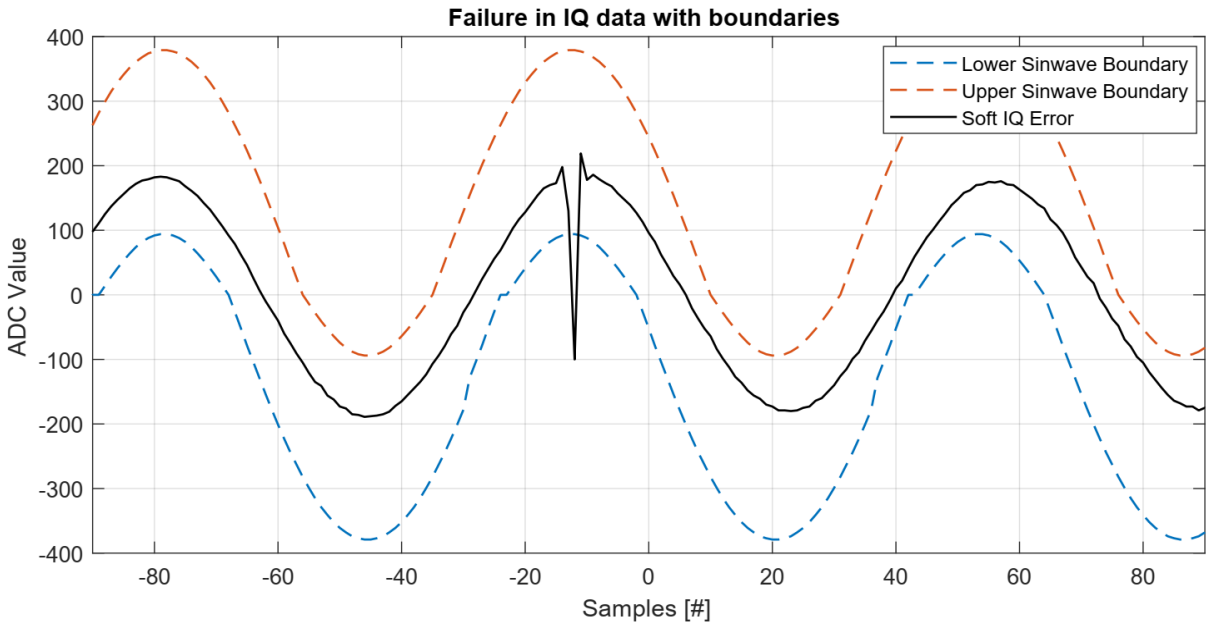

Single Event Effects Testing

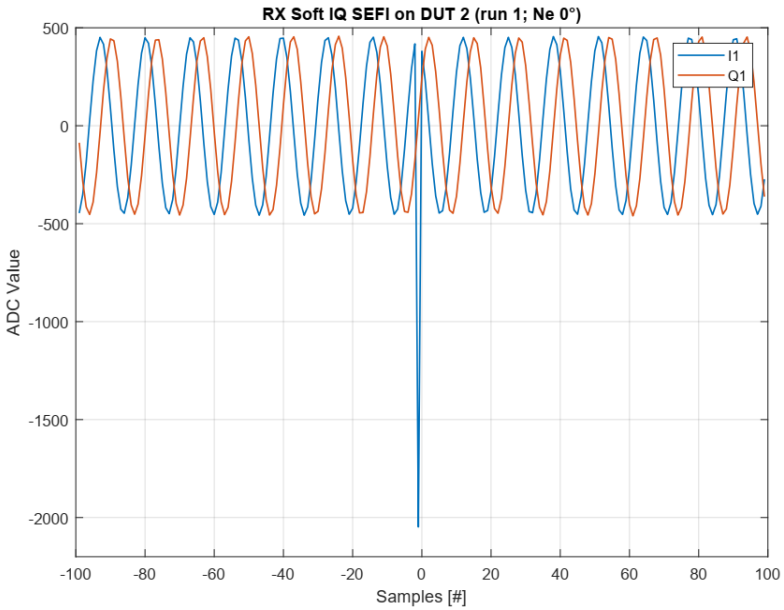

Soft: SEU in ADC

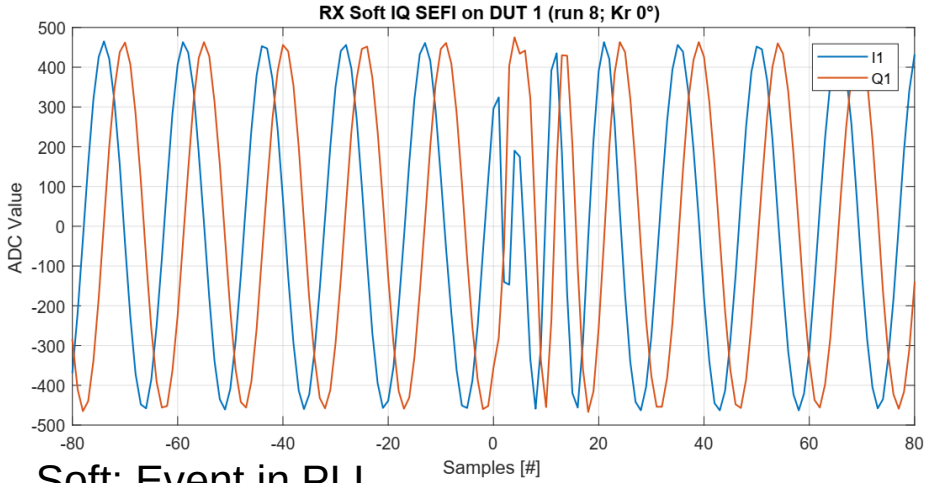

Soft: Event in PLL

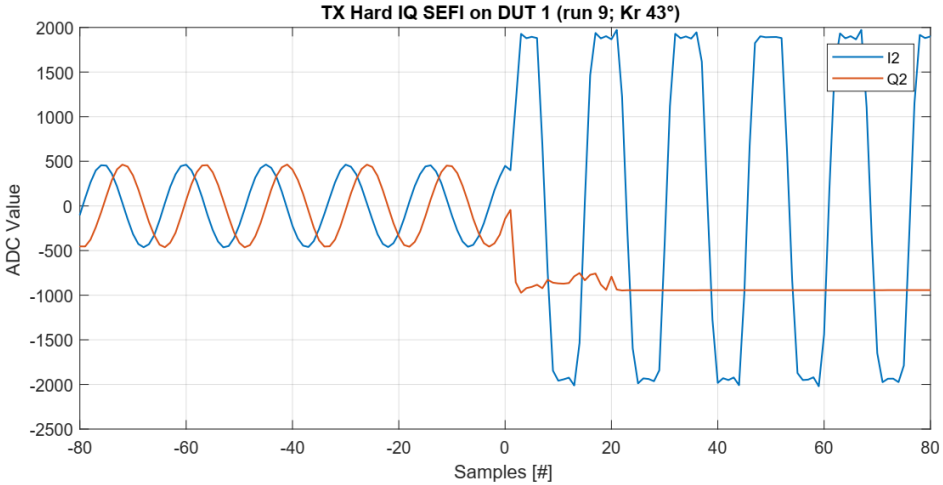

Hard: Loss of IQ data

Single Event Effects Testing

- No destructive event
- Very good SEE response
- Many SEUs, oft not critical
- Mainly recovered by re-configuration
- IQ Failures: 50% hard; 50% soft
- Hard IQ Failure recovered by re-initialization
- GEO and LEO reference mission
  - Nom.: YEARS for failure
  - Worst: DAYS for failure
- Results presented for Heavy Ions
- Proton response much lower (in order of > 10 events)

Orbit	SEE type	Heavy Ion SEE Rate [failure/device/day]	Years for failure
LEO	SEU	3.98×10^{-4}	6.88
GEO	SEU	1.17×10^{-3}	2.34
LEO	SEFI re-config.	2.22×10^{-5}	123
GEO	SEFI re-config.	6.43×10^{-5}	43
LEO	Hard RX IQ SEFI	1.26×10^{-5}	217
GEO	Hard RX IQ SEFI	3.77×10^{-5}	73
LEO	Hard TX IQ SEFI	1.55×10^{-5}	176
GEO	Hard TX IQ SEFI	4.64×10^{-5}	61

Nominal condition

Orbit	SEE type	Heavy Ion SEE Rate [failure/device/day]	Hours for failure
LEO	SEU	3.06×10^{0}	7.78
GEO	SEU	1.33×10^{1}	1.8
LEO	SEFI re-config.	2.02×10^{-1}	120
GEO	SEFI re-config.	8.79×10^{-1}	27.4
LEO	Hard RX IQ SEFI	6.50×10^{-2}	370
GEO	Hard RX IQ SEFI	2.84×10^{-1}	85
LEO	Hard TX IQ SEFI	6.19×10^{-2}	387
GEO	Hard TX IQ SEFI	3.11×10^{-1}	77

Worst case

System-Level Verification

Radiation Testing on System-Level

- For TID Effects: Co60-Source can be used (no limitation in space)
- For SEE: Particle accelarators have only a narrow beam (20-100mm dia)
- How to test on system-level that exceed the narrow beam?
  - Local irradiation (single devices or groups of the system)
  - Failure propagation unclear
  - What about multi-point of failures?
  - Possible solution:

  CERN High Energy Accelerator Mixed-Field Facility (CHARM)
- Use of 24GeV PS Proton beam
- Metal target used (copper)
- Mixed field of particles
  - Neutron, Protons, Electrons
  - No Heavy Ions

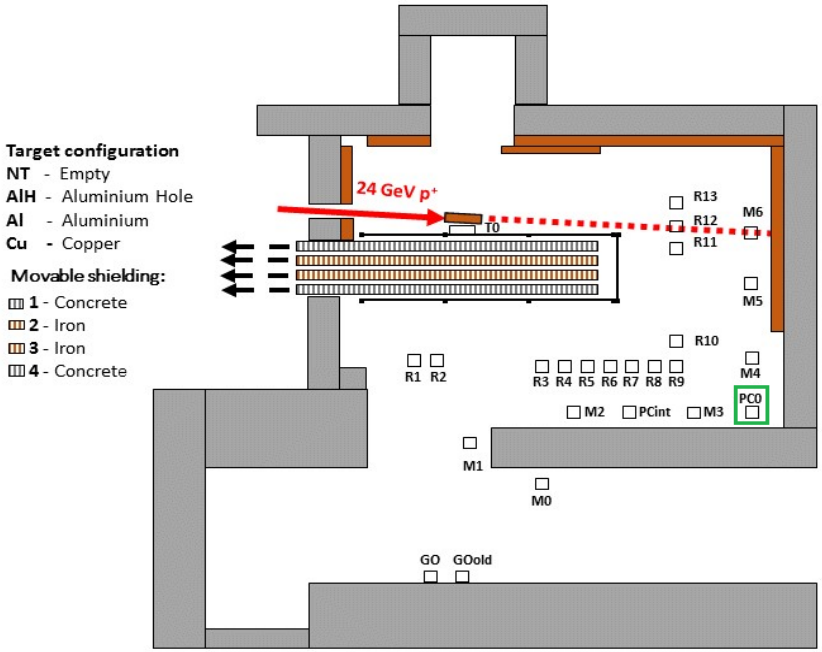

Radiation Testing on System-Level

- Two SUTs in a complex setup due to limited RF interfaces

On system-level

- Potential destructive events due to high current and voltage states
  - Sub-voltage latch-up detection and detection
  - Overvoltage detection and protection
- Single event failure interrupt
  - System-Watchdog executes reset if heart-beat disappears
  - Time-Out of command response (power-cycle)
  - Soft-Watchdog (on program/application level)

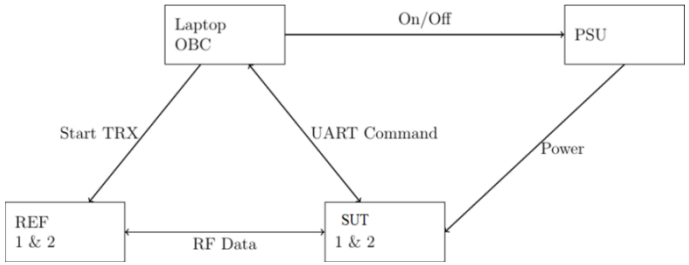

On component-level

- RF-Transceiver deep failure mitigation
- NAND Flash supervisory (Boot device)

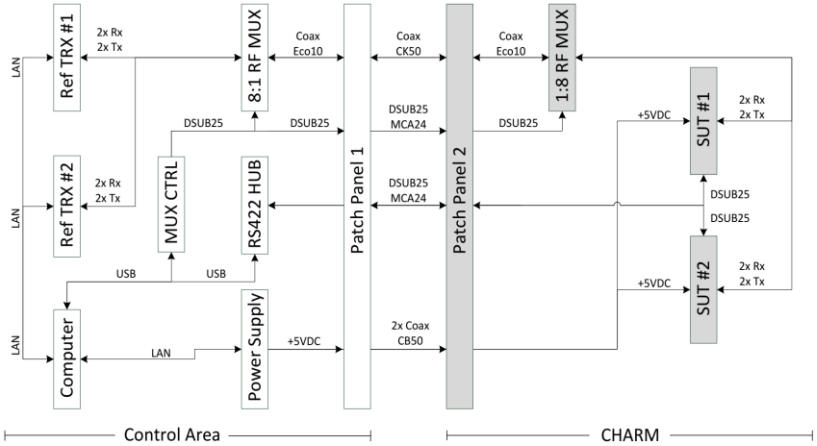

Radiation Testing on System-Level

- System(s) run with multiple tasks on request
  - ➢ HK-Data, RF-Data aq., Spectrogram, …
- No degradation of voltage and current due to TID
- No SELs or destructive failures
- Ability to perform self-recovery

- 100% recovery from failure to valid system operation
- No interrupted boot-processes observed (process takes ~15sec)
- 95% of all failures were system crashes (Zynq+DDR3)
- No invalid data on boot devices (NAND Flash)
- Data fly-by storage on SD-Card critical (SD-Card broken)
  - SUT#2 (partially) not able to response on requested tasks

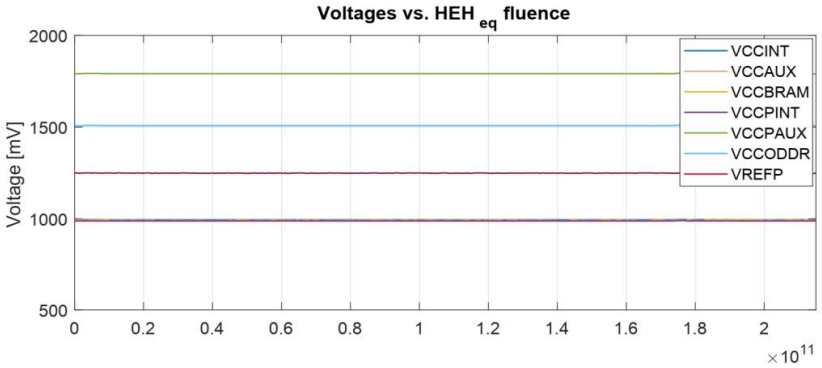

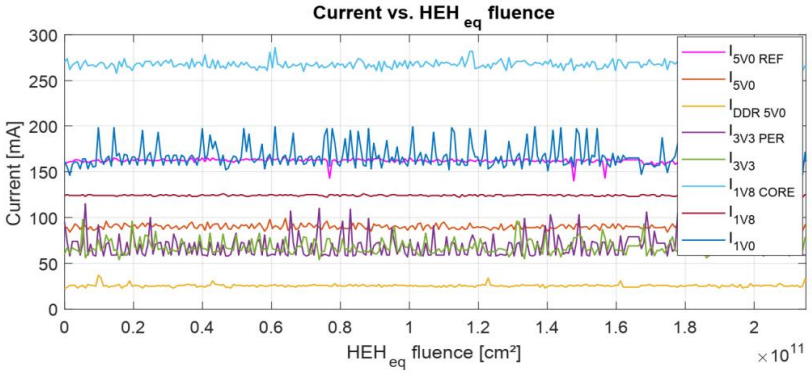

Radiation Testing on System-Level

- RF Transceiver has been irradiated to Proton (max. 190MeV)
  - Low SEU rate in configuration registers
  - Very low SEFI rate
  - No SEFI seen in CHARM, only minor SEUs

- Zynq+DDR3 has been irradiated by proton (max. 190MeV)
  - Same configuration and software were used as in CHARM (only exception: SD-Card was not used for intermediate data storage)
  - No RF-board in use (no RF data captured)
  - Fluence: 5.0×10^{8} #/cm^{2}
  - Comparable saturation of cross-section
    - ~2.6×10^{-8} cm^{2}/device (proton)
    - 2.451×10^{-8} cm^{2}/device (CHARM)

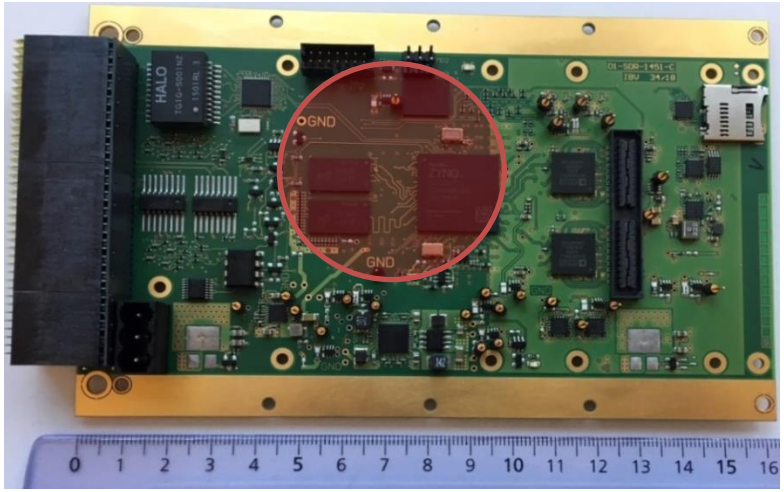

Conclusion and Outlook

Conclusion

- Commercialization of space (NewSpace) tolerates more risk and use new technologies that are not qualified for space, nor radiation hardened by the manufacturer
- Be aware when use COTS components in your space application
- A hybrid approach of RadHard and cots devices is a good solution to increase the performance capabilities and be cost-efficient and reliable
- Radiation effects testing is getting more and more complicated due to the complexity of modern devices
- Radiation testing on system-level is quite new and is an very good approach for testing new developed systems which are using COTS devices, where typically each devices needs to be investigated separately

Thank you for your attention

German Aerospace Center (DLR)
Institute of Space Systems | Avionics Systems Department | Robert-Hooke-Str. 7 | 28359 Bremen

Jan Budroweit
Phone: +49 421 24420-1297 | Telefax +49 421 24420-1120 | jan.budroweit@dlr.de
www.dlr.de/irs

DLR