Active energy absorber - Higher safety through intelligent vehicle structures

Marc Rohrer (FK-WVG)
Prof. Dr.- Ing. H.E. Friedrich (FK)
Dr.- Ing. Elmar Beeh (FK-WVG)
Dr.- Ing. Ralf Sturm (FK-FLK)
Stephan Lapoehn (TS-FZE)

DLR

Proof of Concept
Active energy absorber

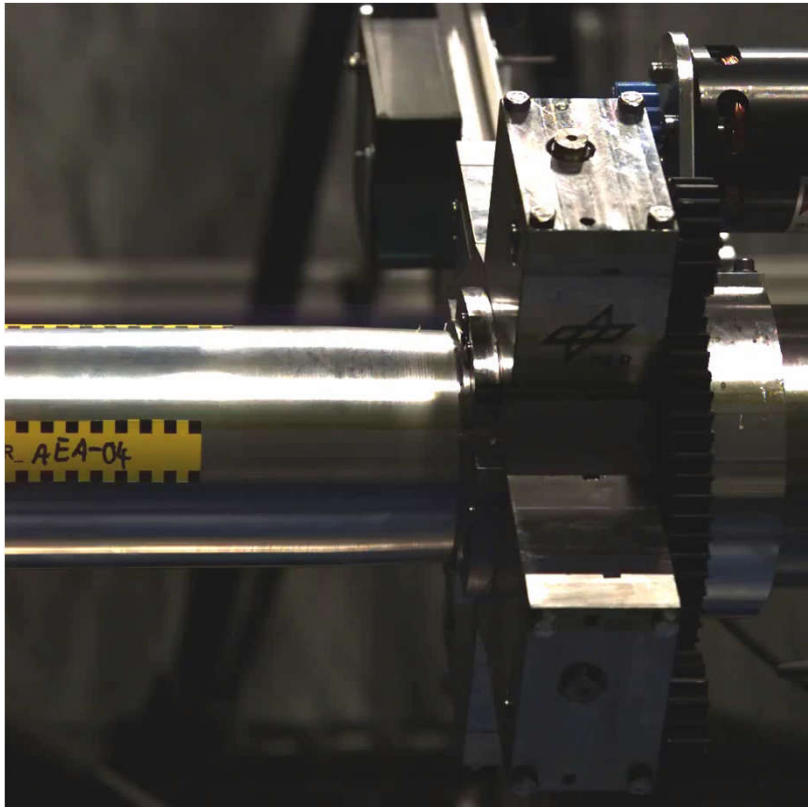

Speed: 3m/s; Camera: 1000fps

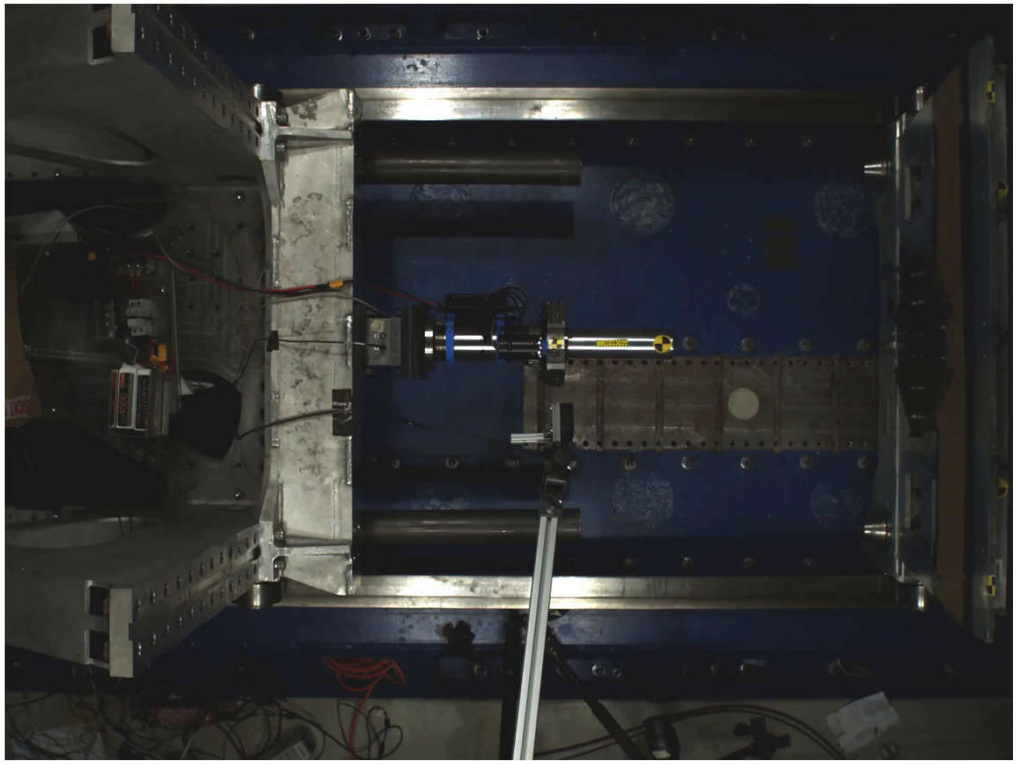

Registration of new vehicles in Germany 2018

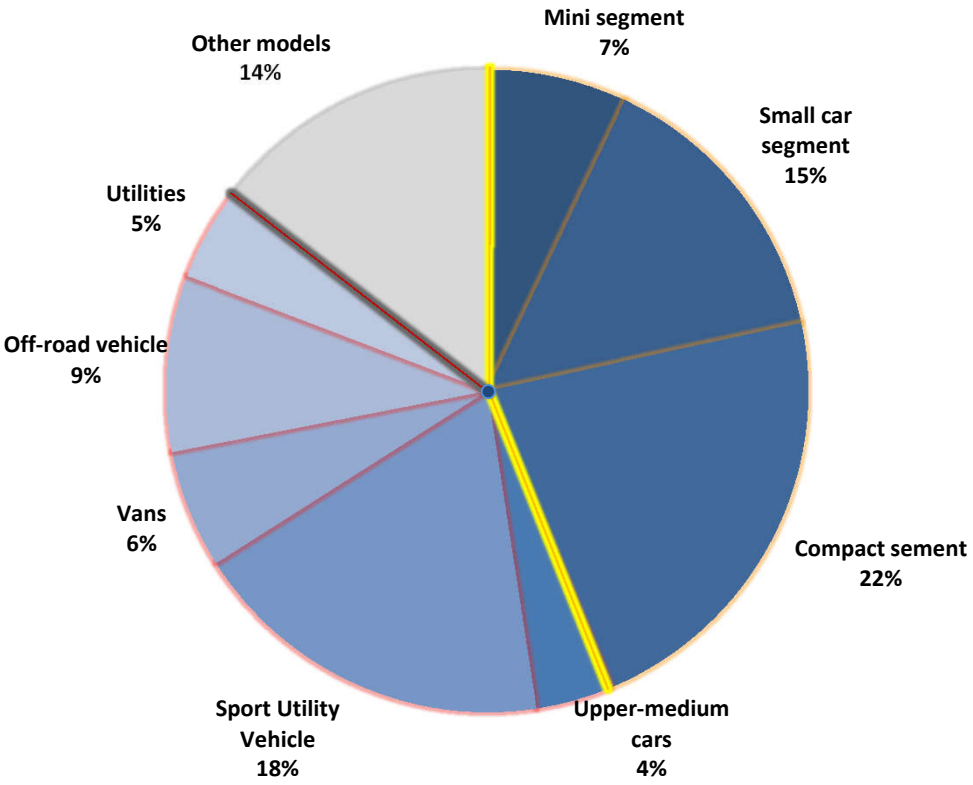

Heavy cars: 42%
Light/ medium cars: 44%

Source: KBA- https://www.kba.de/DE/Statistik/Fahrzeuge/Neuzulassungen/MonatlicheNeuzulassungen/2018/201812_GV1monatlich/201812_nzbarometer/201812_n_barometer.html?nn=2146326

Increasing compatibility

VW Golf vs. Smart ForTwo (2016)

Audi Q7 vs. Fiat 500

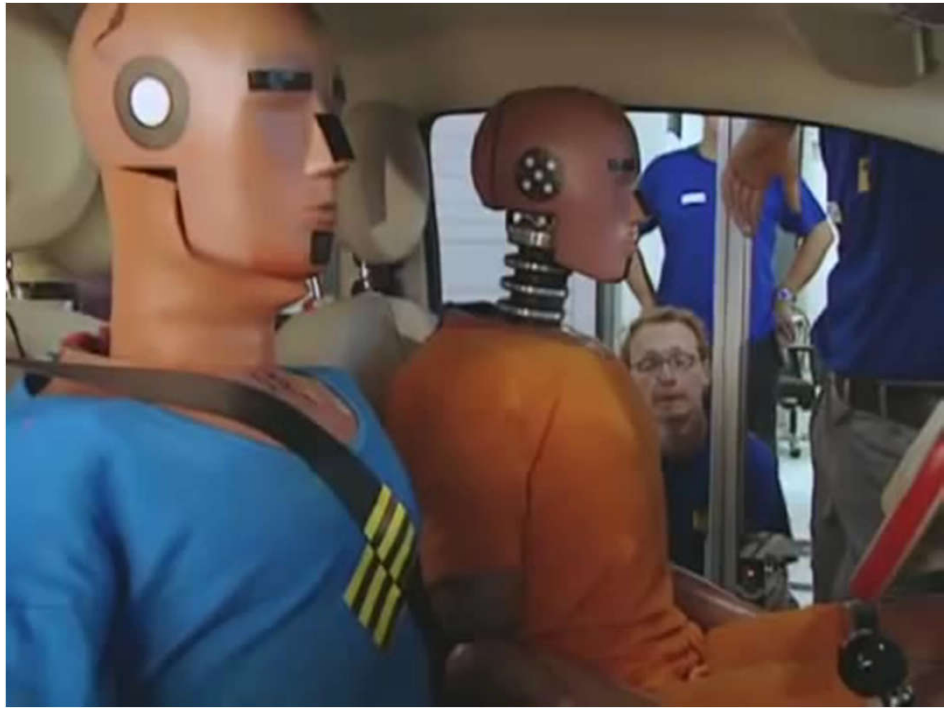

Quelle: ADAC

Crash configuration and bulkhead prinziple

Fiat 500

Audi Q7

Bulkhead principle

$$\mu = \frac{m_{HV}}{m_{LV}} \leq 1{,}6$$

$$v_{max} \leq 56\ \frac{km}{h}$$

Empty vehicle mass: 975kg Empty vehicle mass: 2070kg → $\mu = 2{,}12$

Permitted total mass : 1350kg Permitted total mass: 2765kg → $\mu = 2{,}05$

Source: ADAC; ZOBEL, R. Demands for Compatibility of Passenger Vehicles. 16th InternationalTechnical Conference on the Enhanced Safety of Vehicles

Improving compatibility between cars of different masses

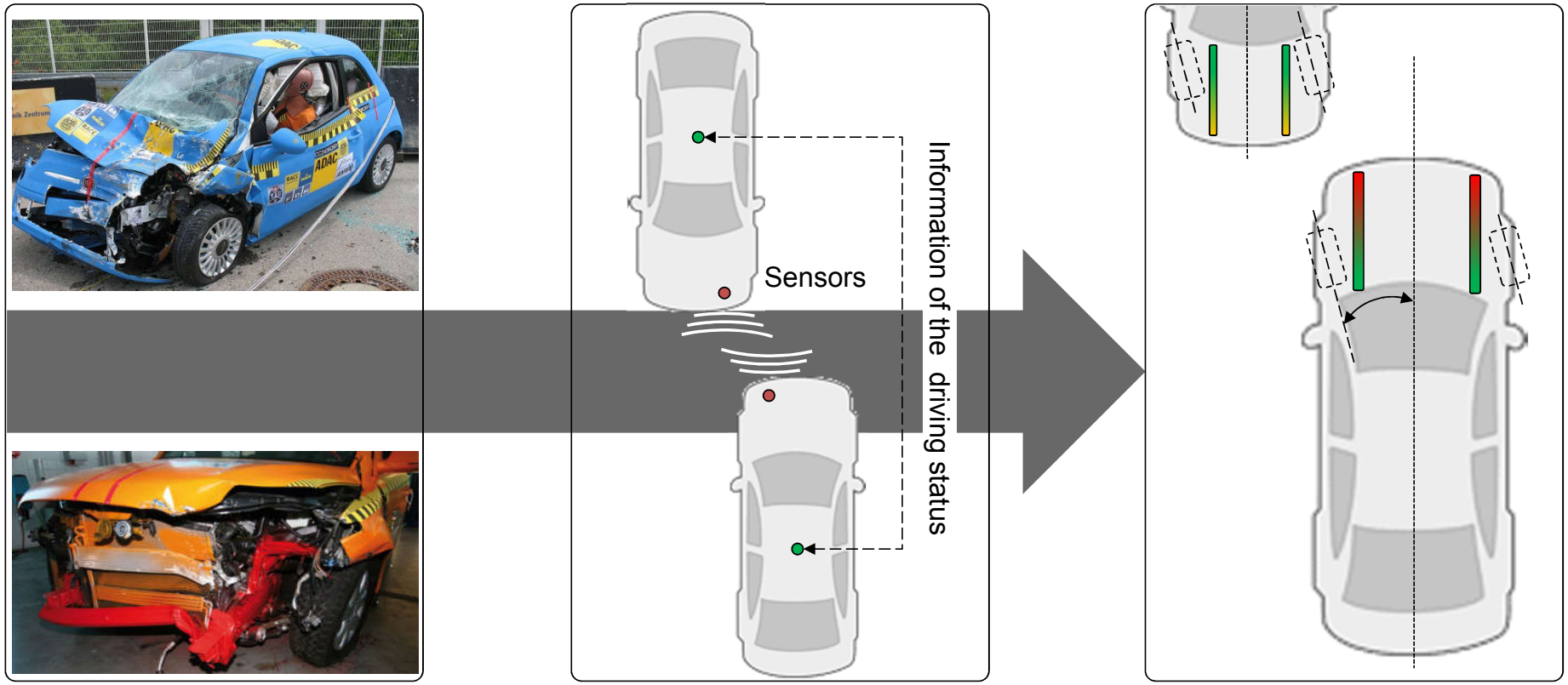

ADAC Crashtest SUV vs. Minicar

Communication between cars
or live evaluation of sensor data

Optimization of the energy levels

Combination of vehicle intelligence and active energy absorbers

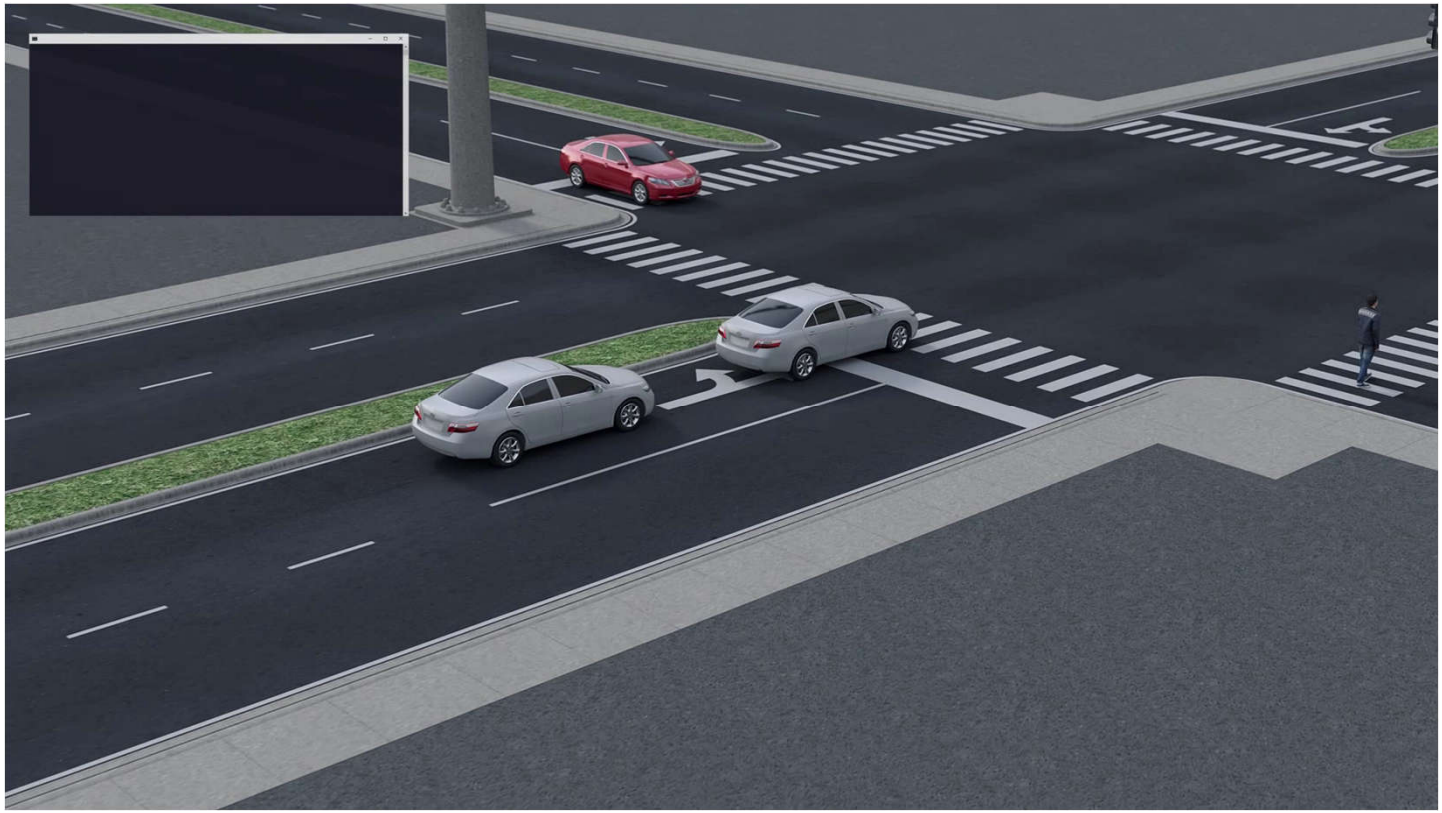

Preferable crash zones

If possible, hit upon massive structures near the vehicle's vertical axis

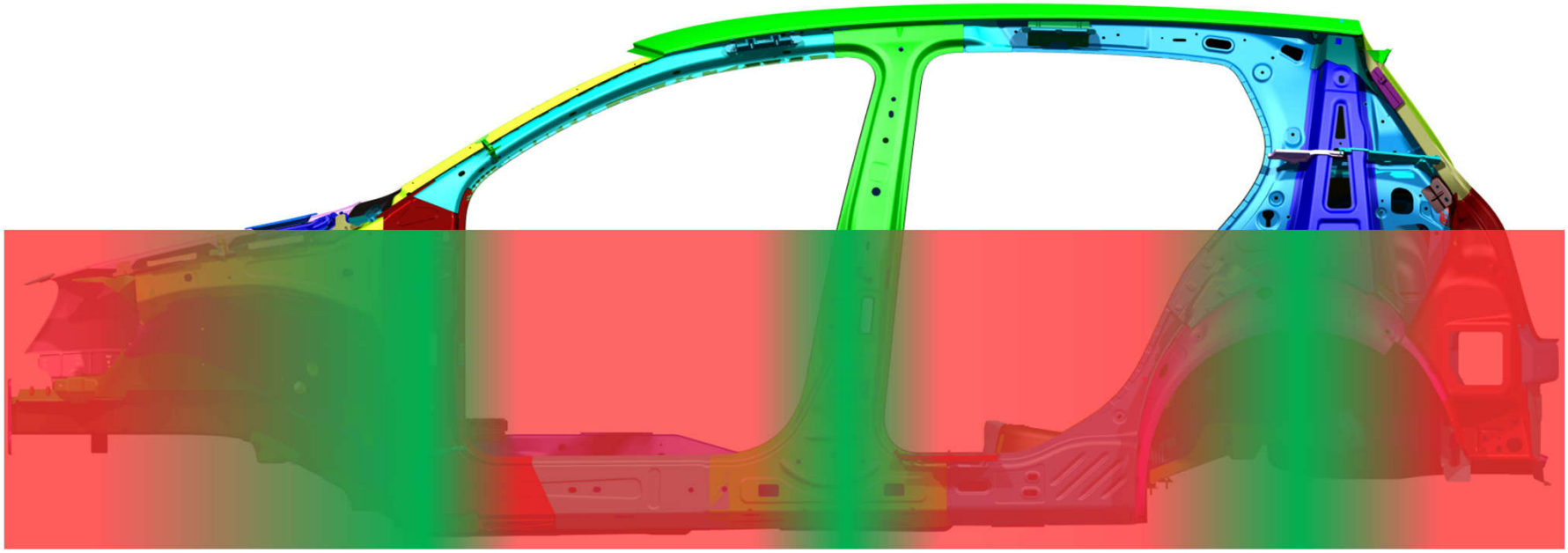

Quelle: Project SLC Golf

Comparison of normal and weakend long beams

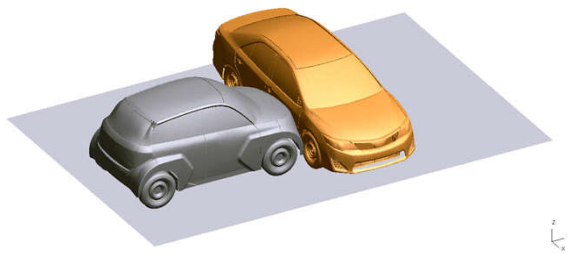

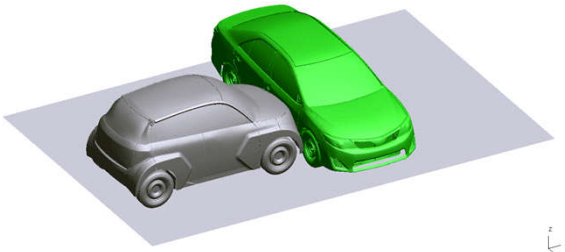

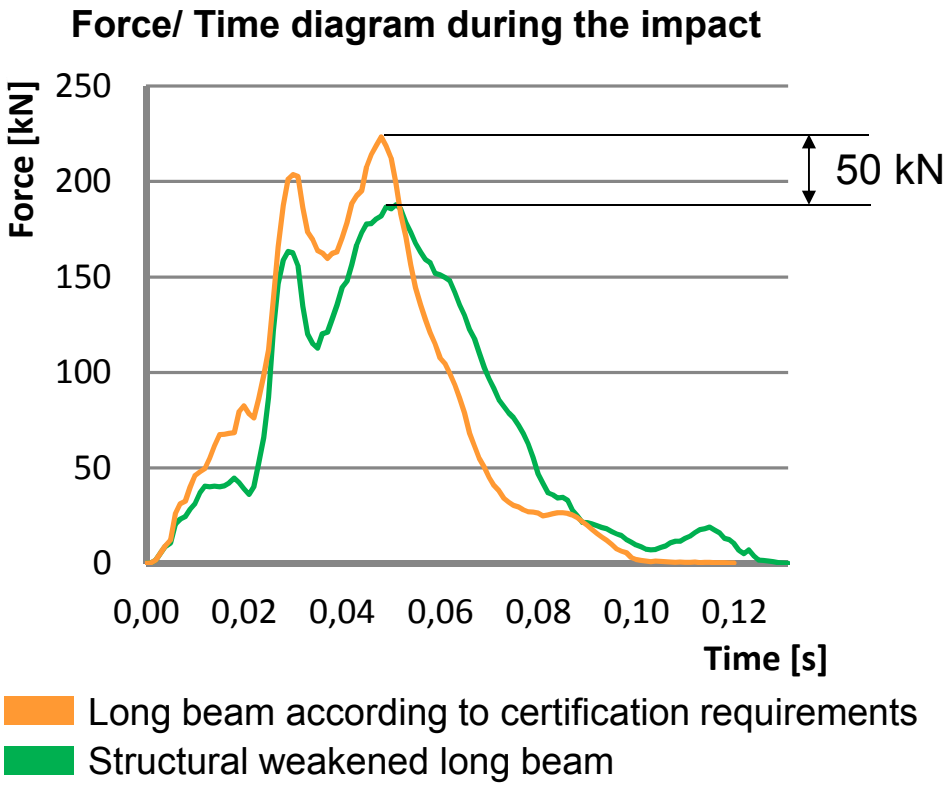

- The intrusion depth could be reduced by around 63.7 mm
- Lower force peaks and therefore lower deceleration of the passengers

Function of the peeling tubes

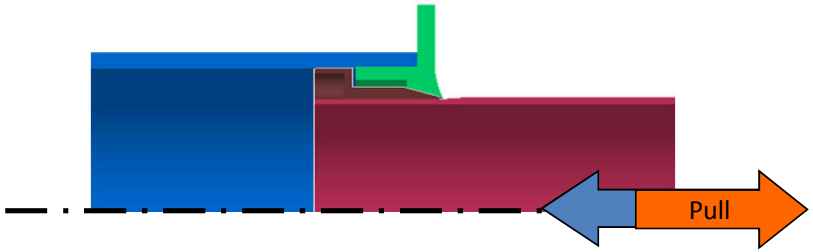

Advantageous properties of the concept:

- Forces can be adapted to the requirements via very small component changes
- Structure and rigidity of the telescopically retracting tube is maintained during a crash

Functional proof using a generic longitudinal beam structure

Force / Path Diagram of the two peeling steps

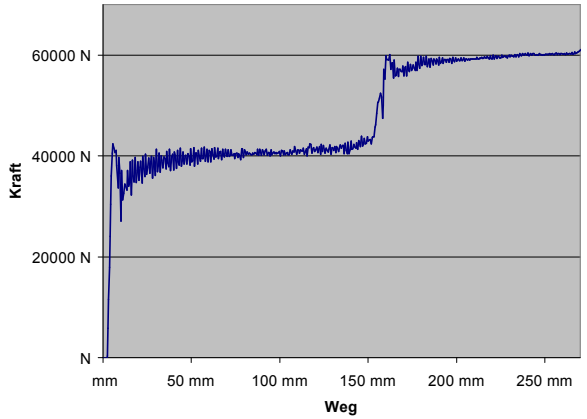

Crash test adaptive front end

Front end v=12,5 m/s

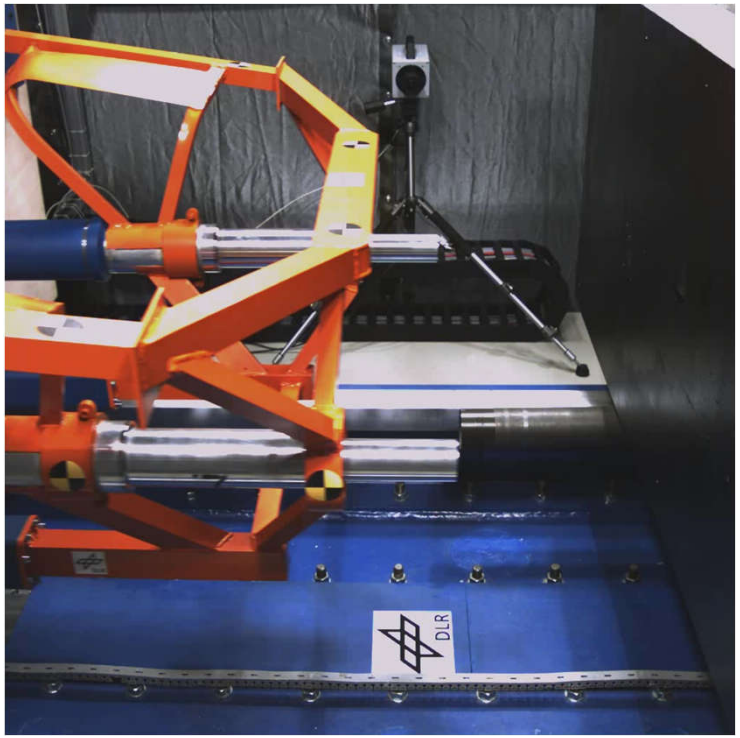

Possibilities for using peeling tube absorbers for adaptive vehicle structures

Passive adaptation of the crash performance by replacing the peeling modules

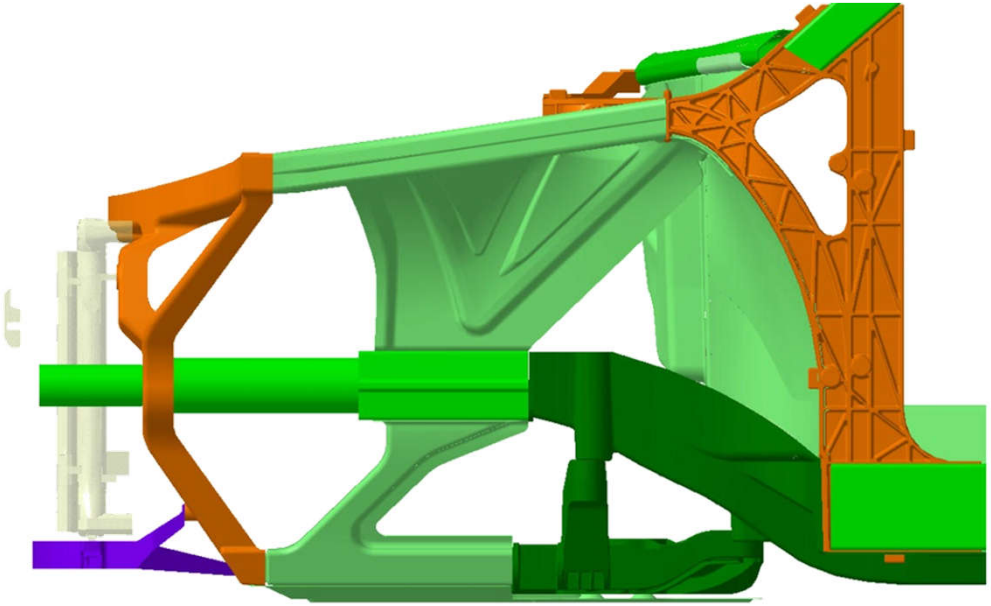

Active adaptation of the crash performance by adjustable energy absorbers

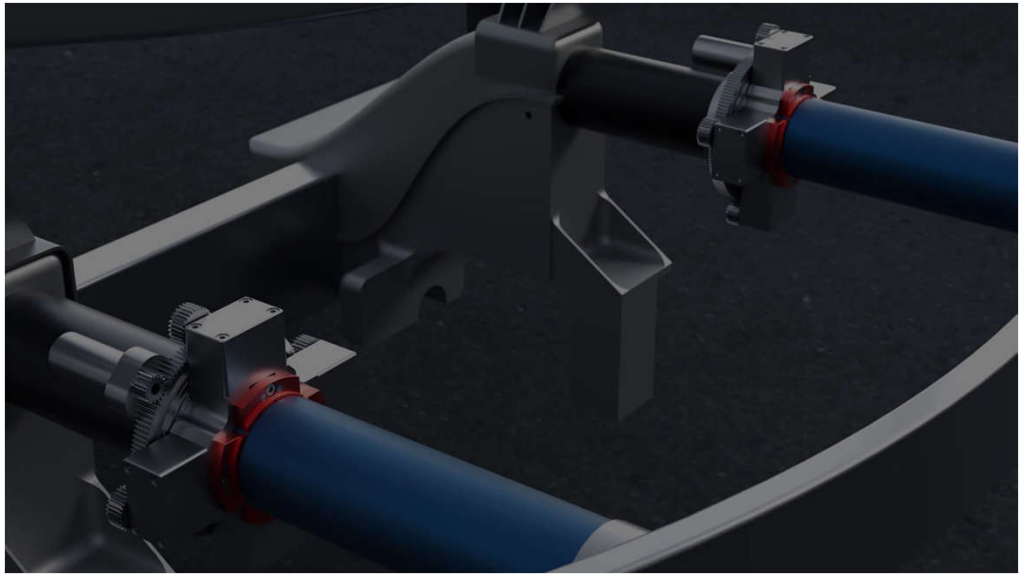

Concepts

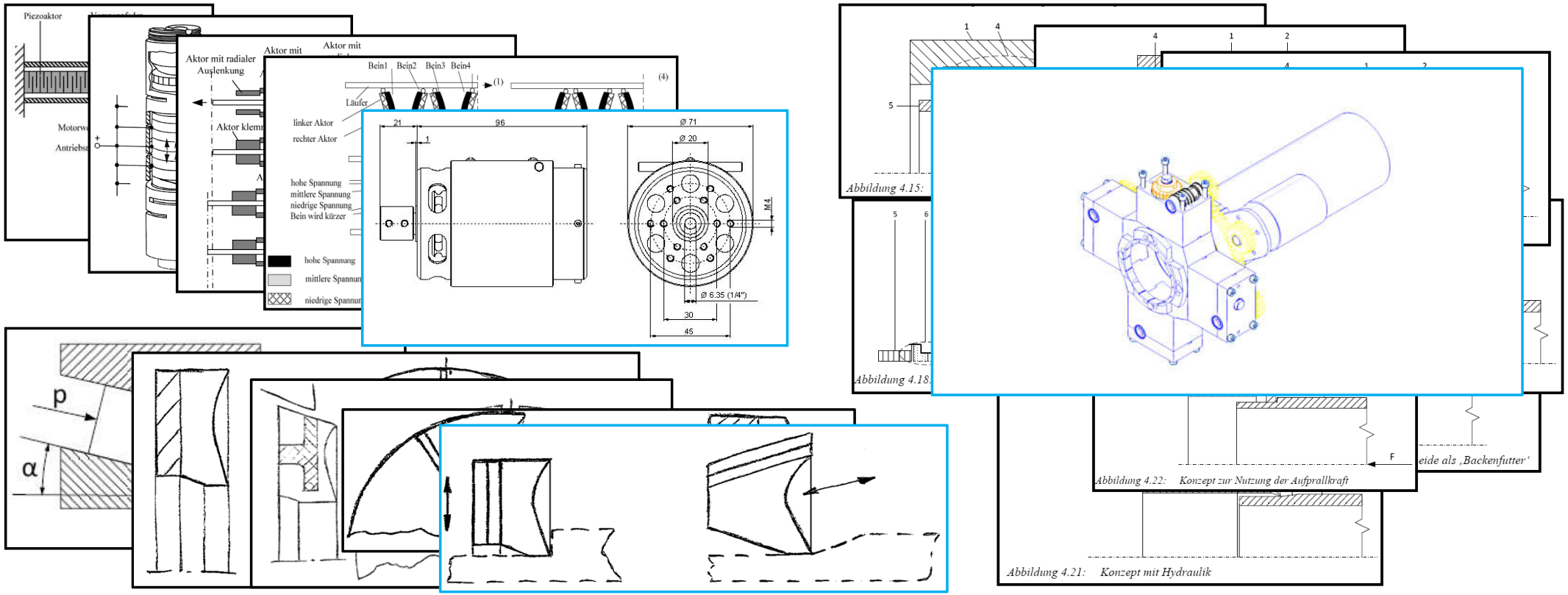
Piezoaktor
Aktor mit radialer Auslenkung
Aktor mit
Bein1 Bein2 Bein3 Bein4
Läufer
linker Aktor
rechter Aktor
hohe Spannung
mittlere Spannung
niedrige Spannung
Bein wird kürzer
Ø 71
Ø 20
Ø 6.35 (1/4")
M4
30
45
p
α
Abbildung 4.15:
Abbildung 4.18:
Abbildung 4.22: Konzept zur Nutzung der Aufprallkraft
Abbildung 4.21: Konzept mit Hydraulik

Pre-Test: Blade optimization
Design of experiment

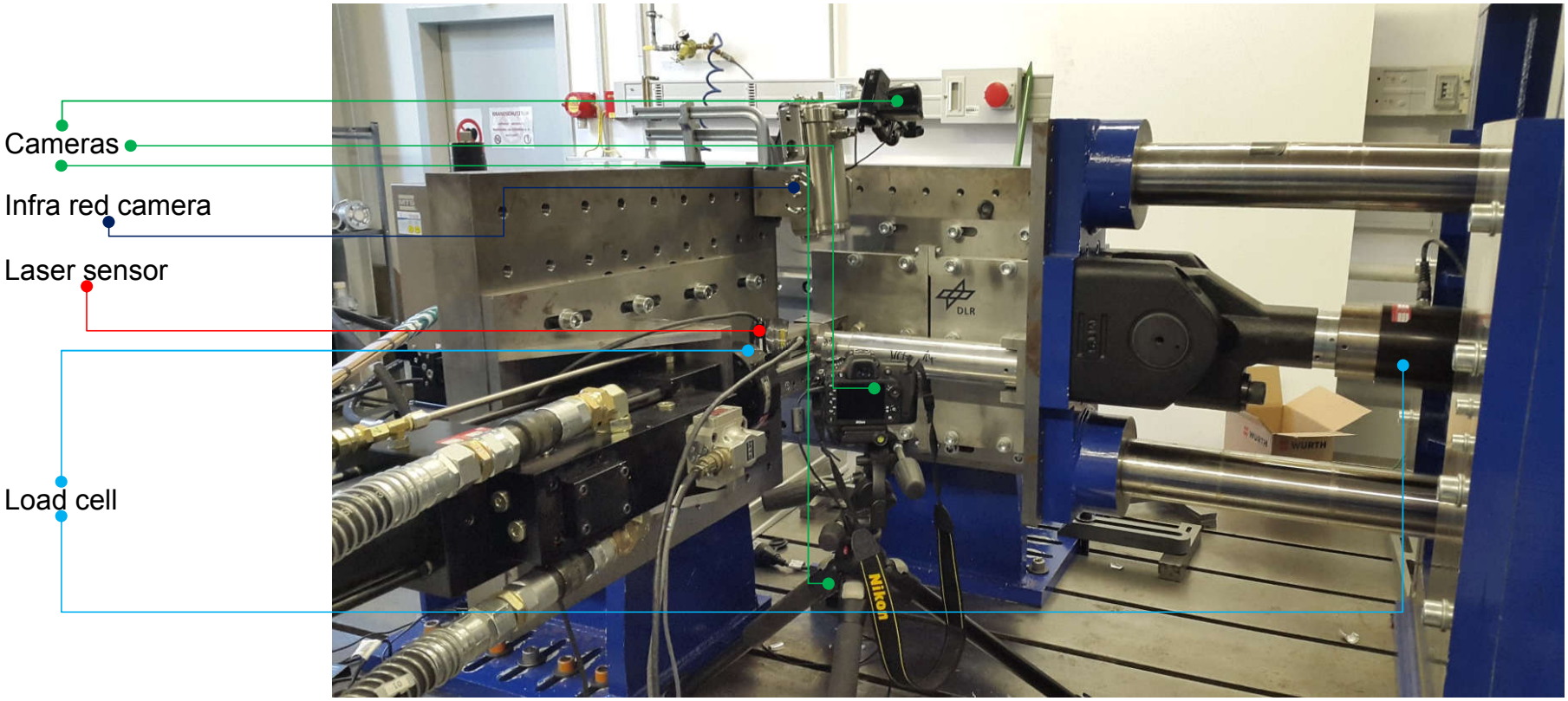

¼ Blades designed according to ring blades

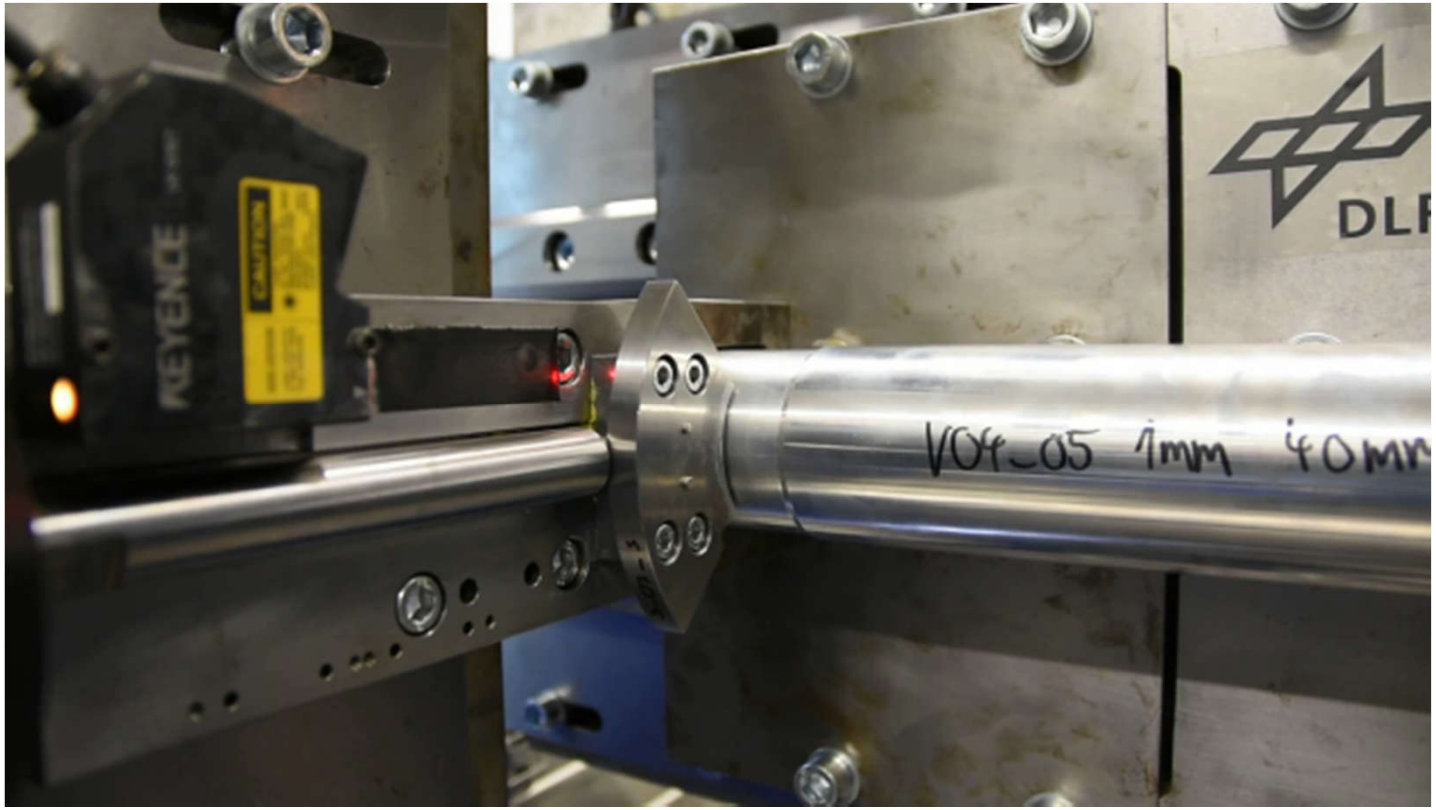

V04_05

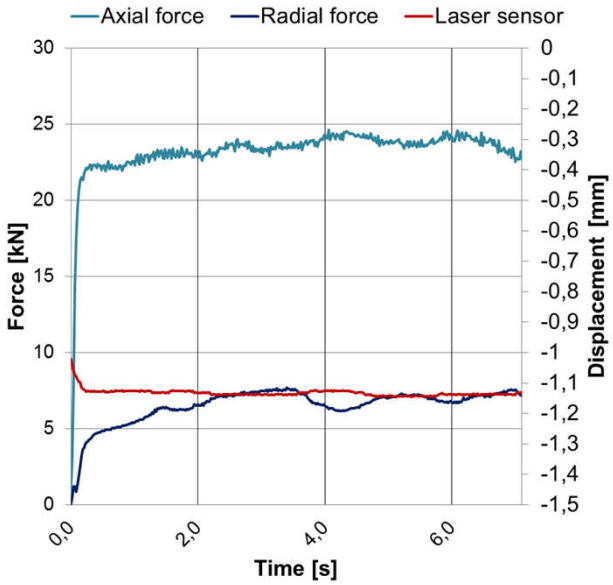

$$F_{rad} \approx 28{,}57\% * F_{ax}$$

Optimized blades for active energy absorbers

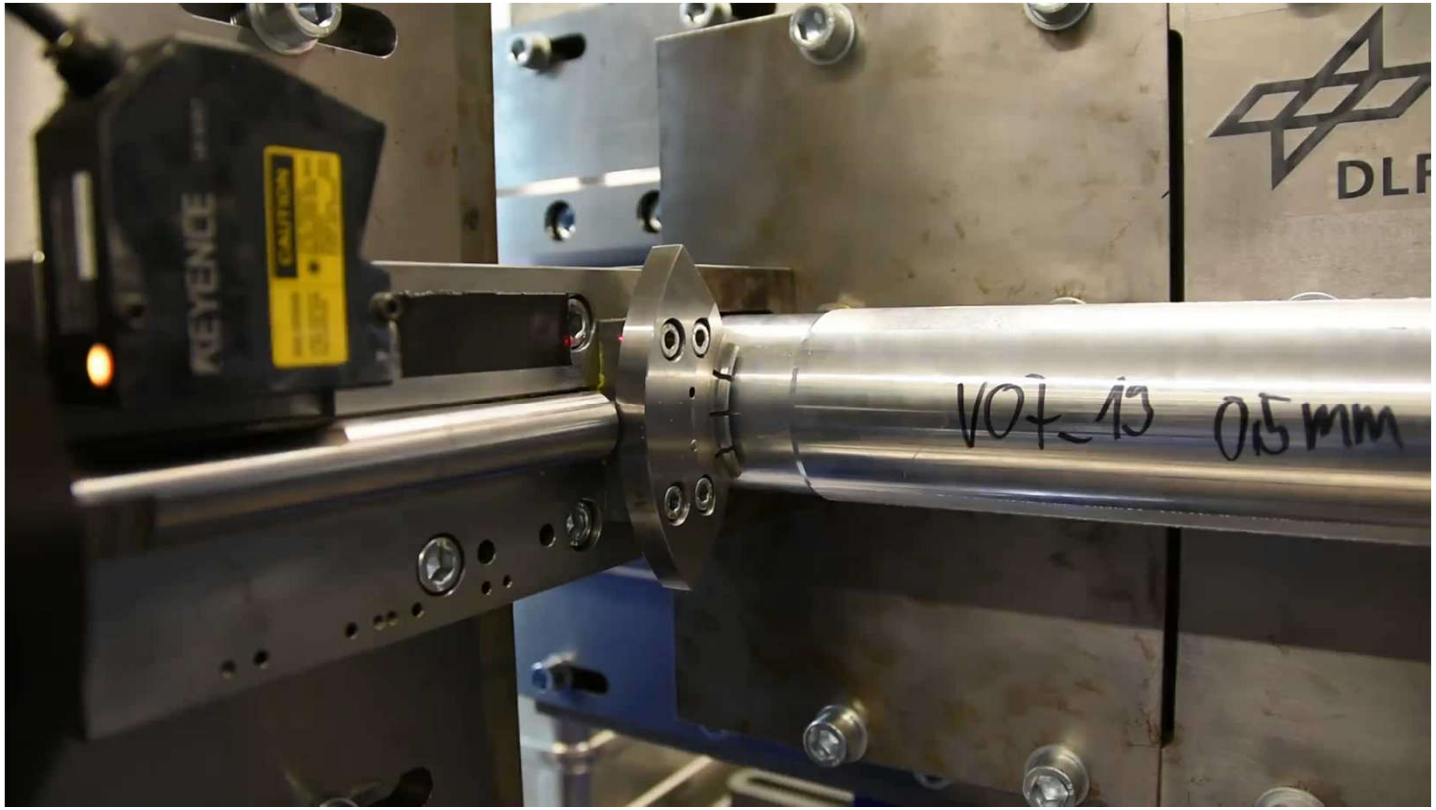

V07_13 mod. blade

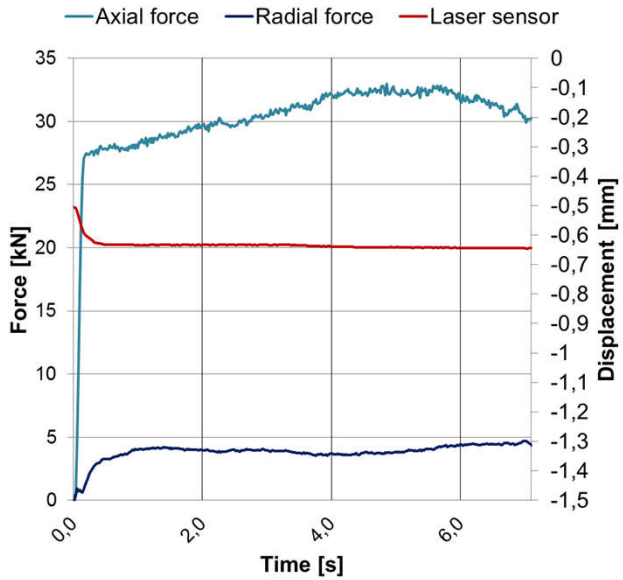

$$F_{rad} \approx 12{,}75\% * F_{ax}$$

Pre-Test: Actuator
Design of experiment

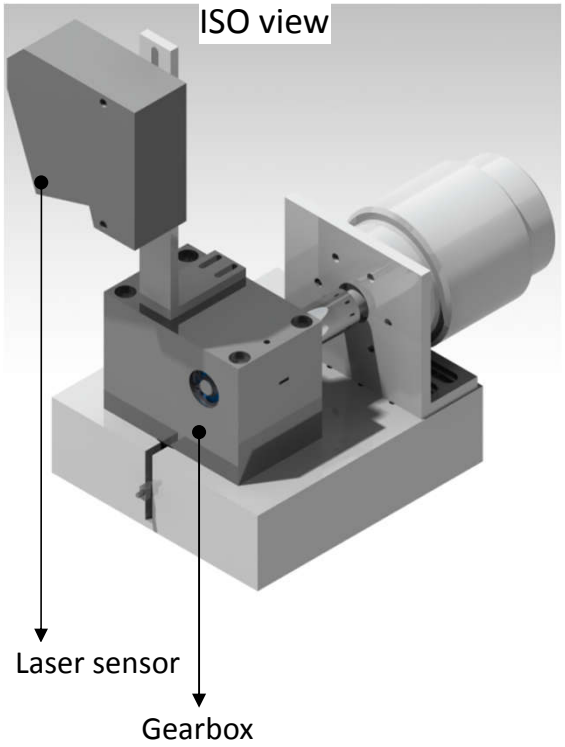

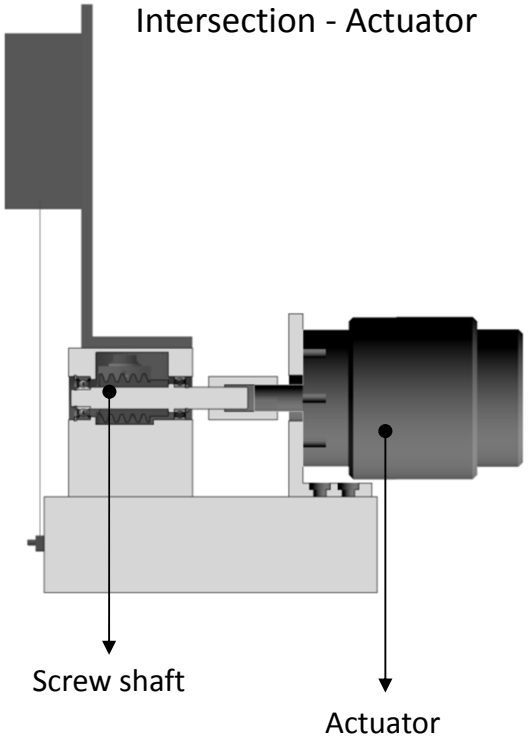

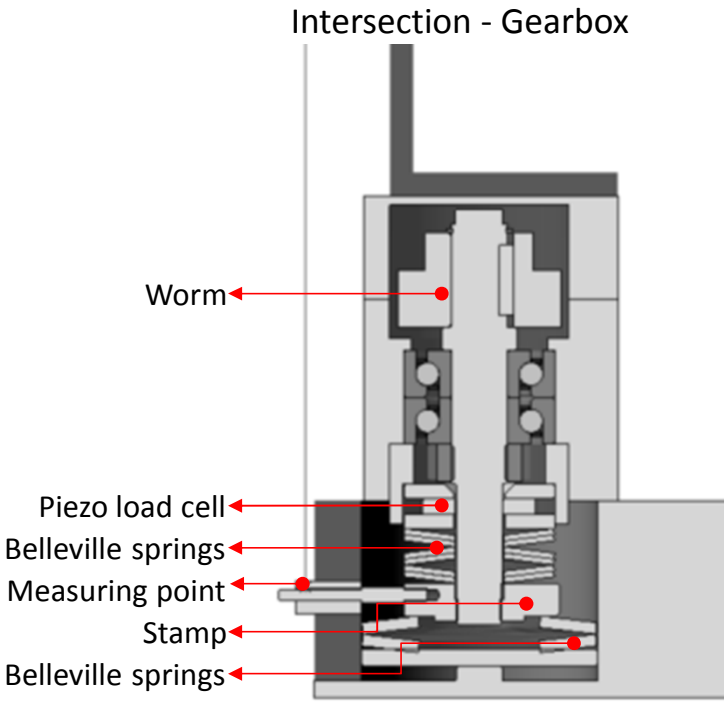

Data of the load cell and the laser

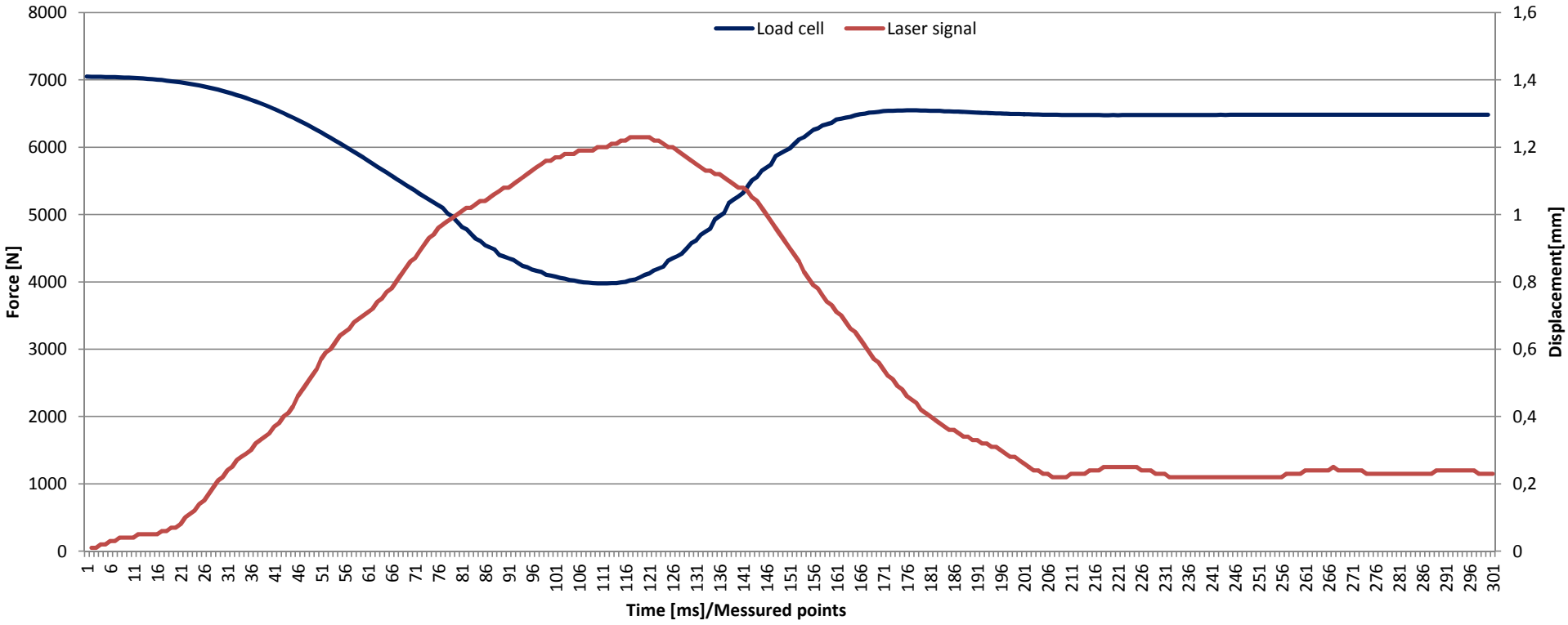

State of the research project

Concepts

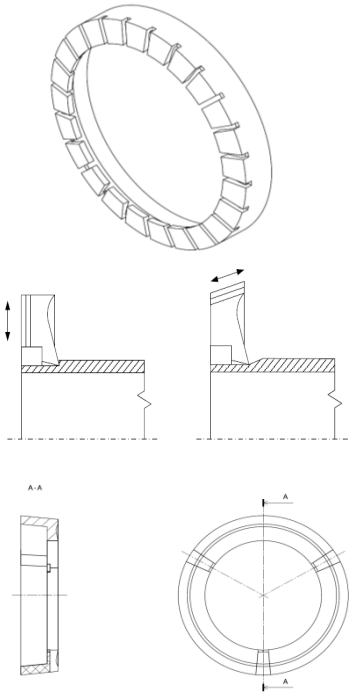

Pre-Tests: Optimizing the blades

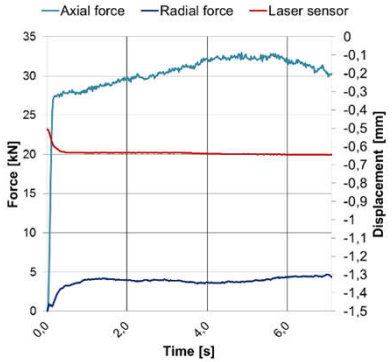

Pre-Test: Actuator

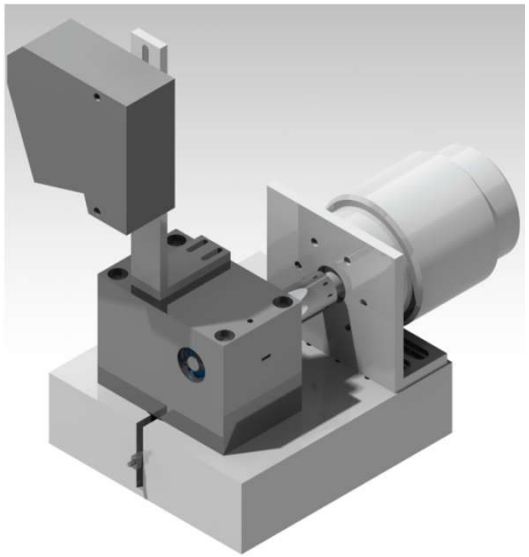

Proof of Concept

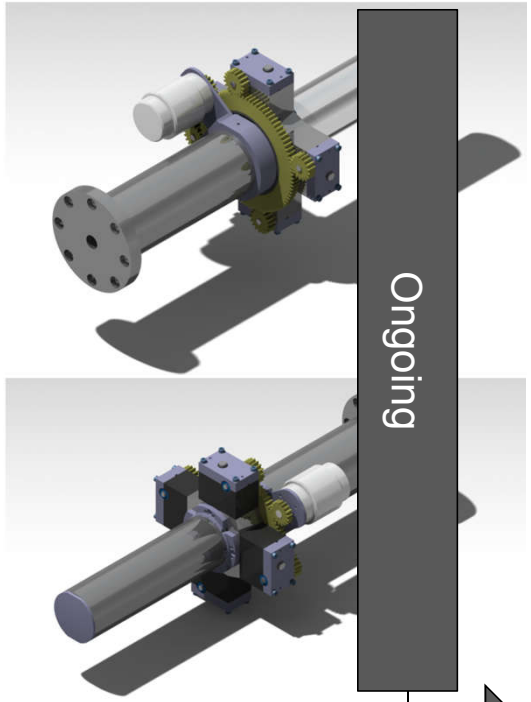

Ongoing

Time

Proof of Concept
Active energy absorber

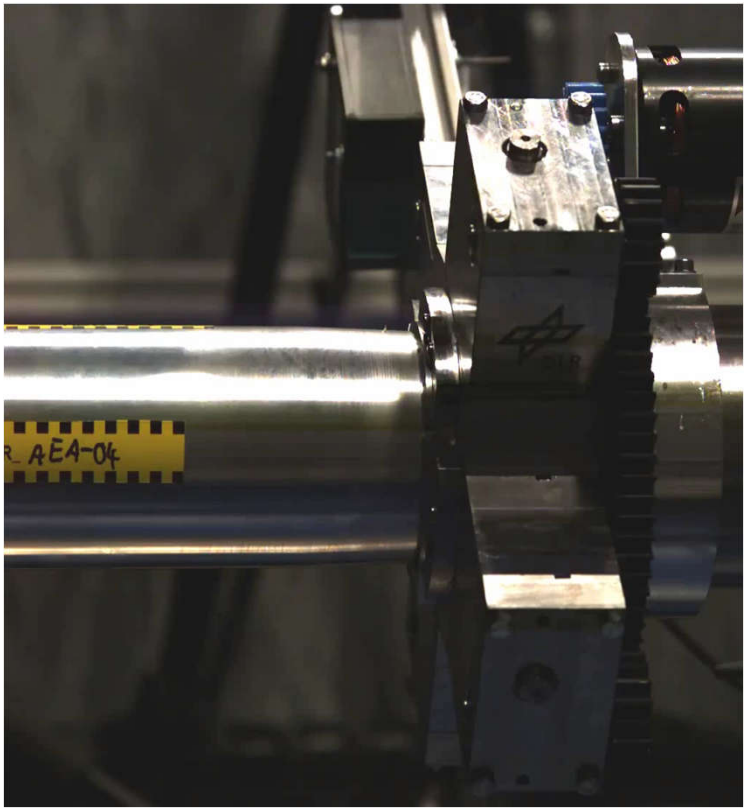

Speed: 3m/s; Camera: 1000fps

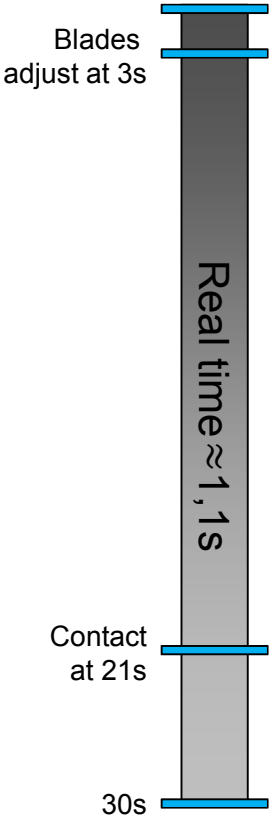

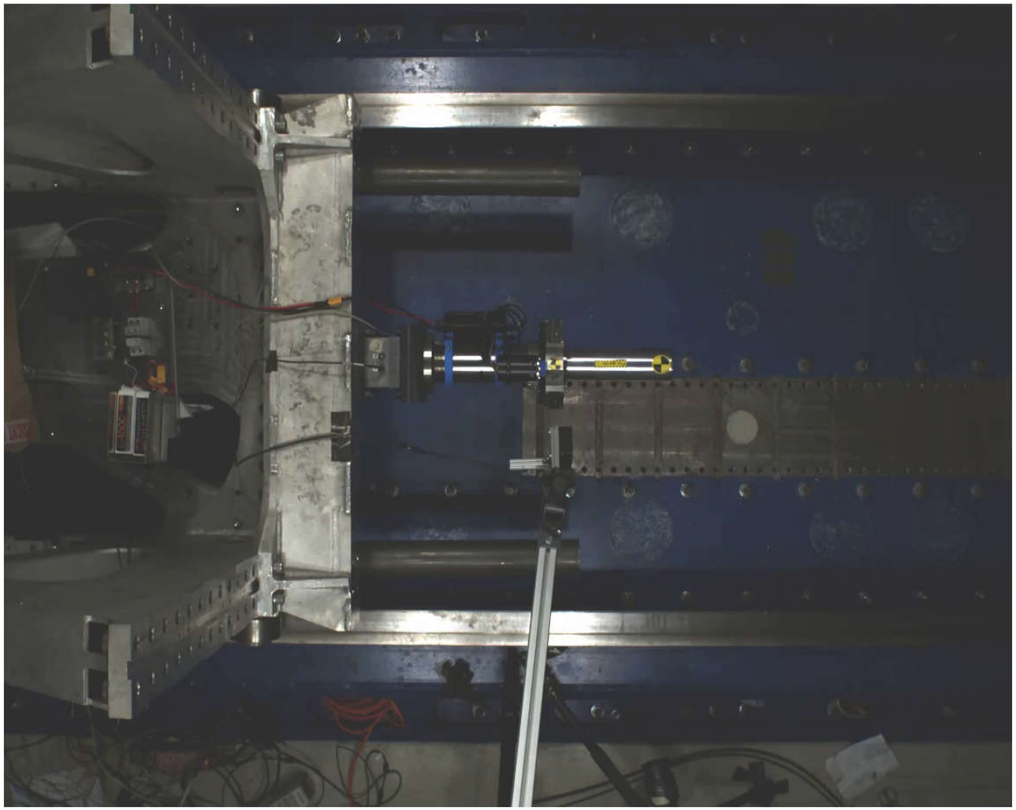

Summary

- Proof that the technology works and…
  - the actuator is able to reach every blade position in ≤ 110ms
  - asymetric energy absorption reduces intrusion
  - the acceleration of the occupants can be reduced

Thank you for your attention

Contact: Marc Rohrer
Tel.: +49 711/ 6862 - 8122
Email: Marc.Rohrer@dlr.de

Contact: Dr. Elmar Beeh
Tel.: +49 711/ 6862 - 8311
Email: Elmar.Beeh@dlr.de

DLR