THE 1ST INTERNATIONAL WORKSHOP ON SPACE SITUATIONAL AWARENESS

# Re-entry Simulation and Demise Testing at DLR

Thorn Schleutker and Ali Gülhan

DLR Supersonic and Hypersonic Technologies Department


DLR

# Demise Testing – Why?

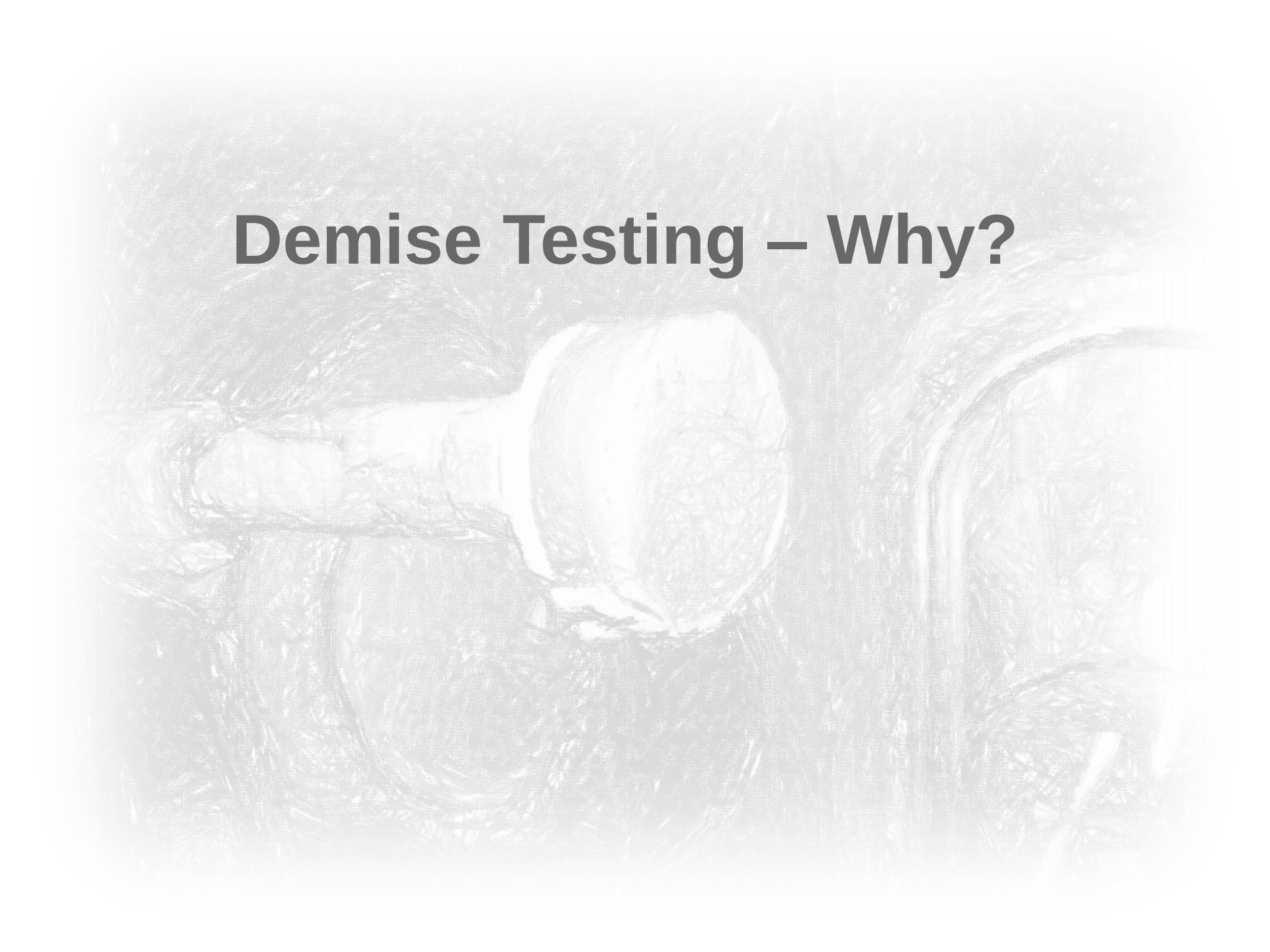

# Demise Testing – Why?

Modern numerical capabilities raise the expectation that it is possible to capture the complete demise numerically.

Statistics with big numbers and colorful images suggest high quality and reliability of the results.

Wind tunnel experiments on the other hand are very expensive and the measured data is limited.

**Why would we want to do demisability testing?**

The video on the next slide shows a test of a CFRP sheet under 100 kW/m² load, that was predicted numerically to demise within 20 seconds. The video is forwarded the most of the time at a factor of 10.

# Demise Testing – Why?

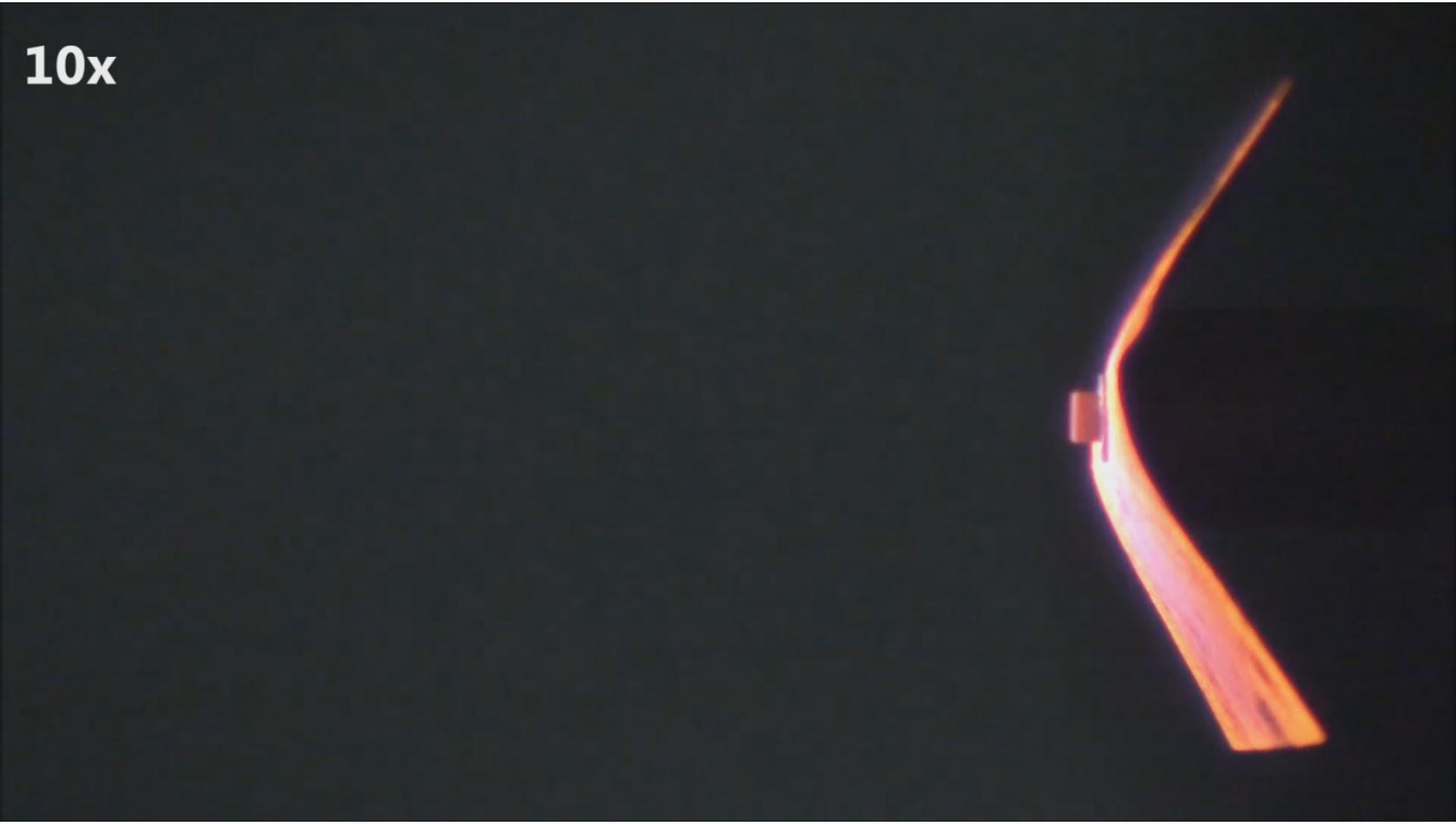


DLR

# Demise Testing – Why?

Demisability testing is necessary because

- the true demise behavior needs to be investigated and the underlying processes have to be revealed for model building,

- demise model parameters have to be tuned to correctly predict the demise behavior by comparison with experiments and

- the demise models and tools need to be validated against test data.

# Test Facilities of DLR

# Test Facilities of DLR

The Supersonic and Hypersonic Technologies Department in Cologne operates wind tunnels with long test durations (30 seconds up to 2 hours) from subsonic to hypersonic Mach numbers.

The wind tunnels can be divided in two categories:

1. Cold facilities (TMK, VMK and H2K)

   Wind tunnels with up to 1100K test gas temperature focusing on flow phenomena and aerodynamic testing. Will be presented in the next talk (*Dr. Ali Gülhan, Multibody Aerothermodynamics of Space Debris Fragments*).

2. Hot facilities (L2K and L3K)

   Arc heated facilities with high test gas temperatures, mainly used for material characterization (ablators and ceramic heat shield qualification, demisability testing).

# Arc Heated Facilities – L2K and L3K Overview

L2K and L3K are wind tunnels with

- supersonic to hypersonic flow fields,
- high gas enthalpies (dissociation, ionization, chemical reactions),
- low densities, pressures and Reynolds numbers and
- long test duration (up to 2 hours demonstrated).

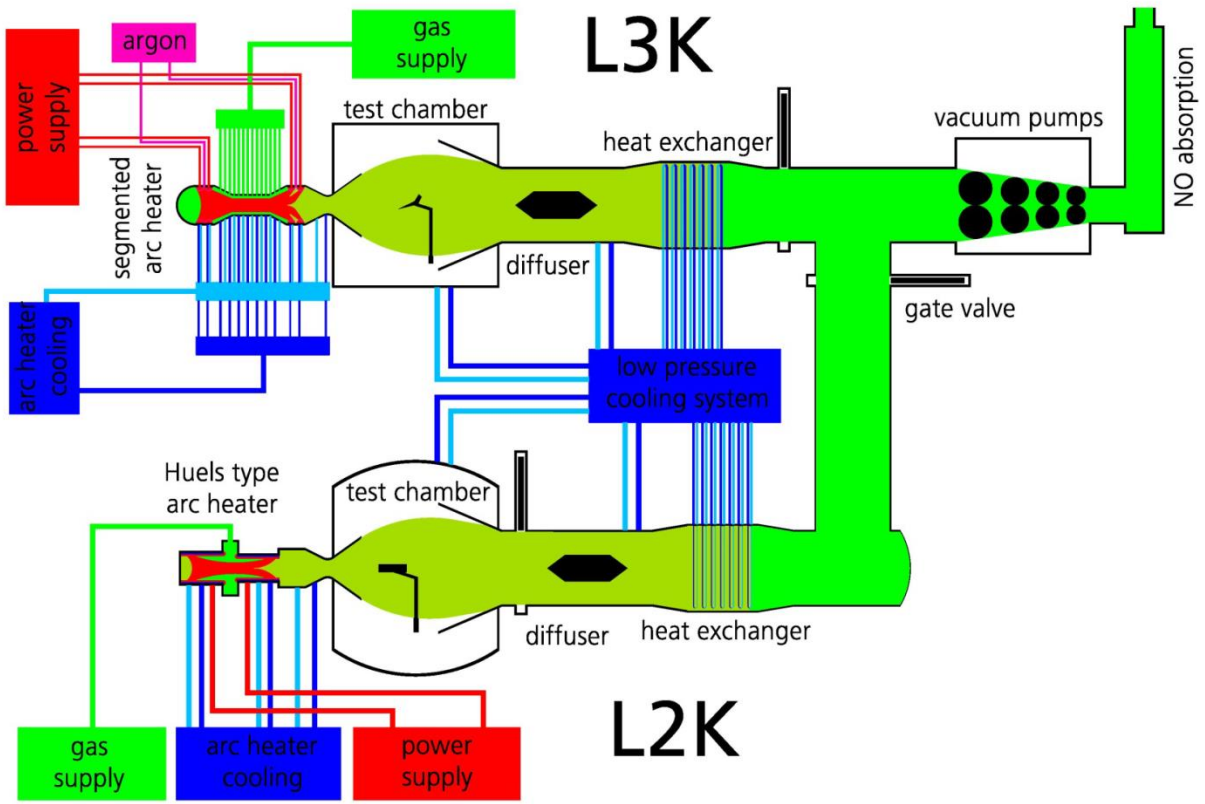

# Arc Heated Facilities – L2K

The L2K wind tunnel

- is very cost efficient and
- flexible (operation with different test gases, particle loaded flow etc.)
- but limited in terms of mass flow rate, stagnation pressure and heat fluxes.


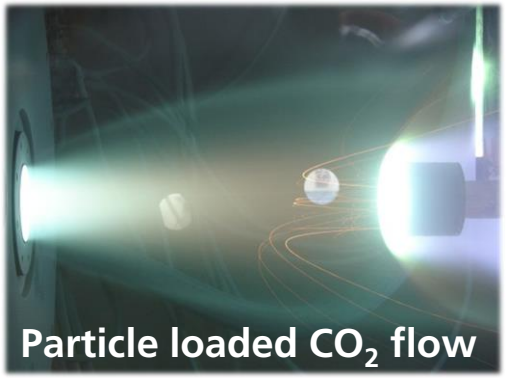


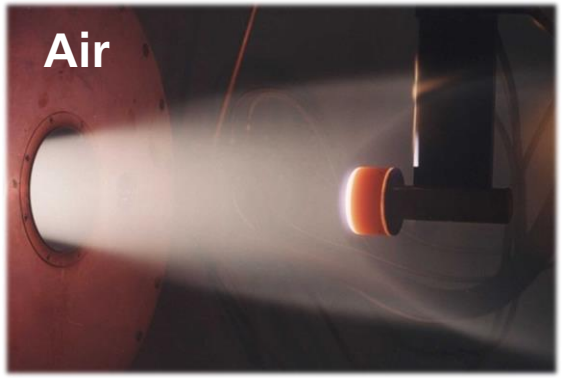


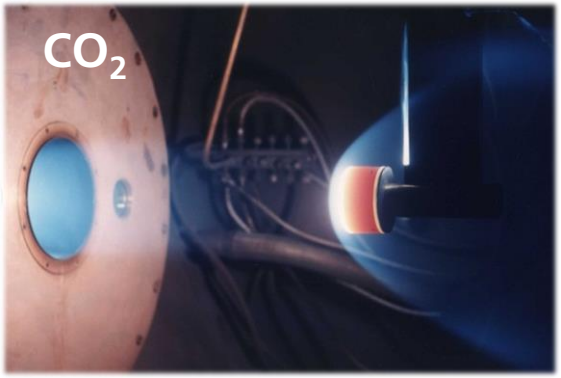

# Arc Heated Facilities – L3K

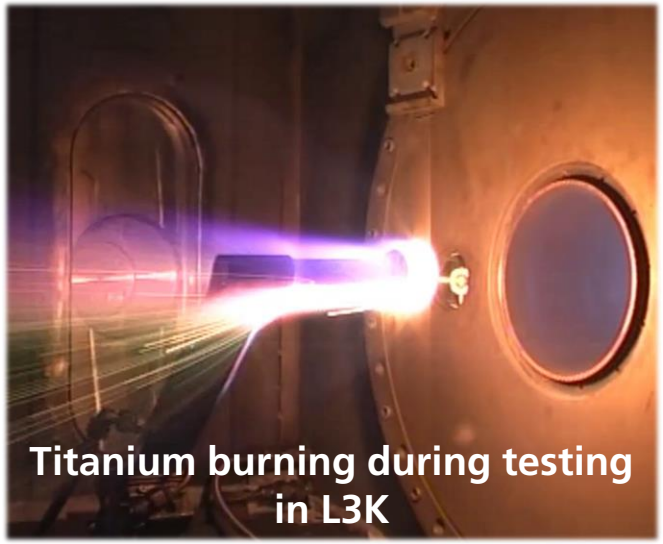


The L3K wind tunnel can provide higher mass flow rates and electrical heating power, resulting in up to

- 2400 hPa stagnation pressure,
- 20 MJ/kg gas enthalpy and
- 14 MW/m² heat flux.

# Arc Heated Facilities – Test Condition Matrix

| | | L2K | L3K |
|---|---|---|---|
| Nozzle exit diameter | [mm] | 50, 100, 200 | 50, 100, 200, 300 |
| Mach number | [-] | 3 – 6 | 3 – 10 |
| Reynolds number | [1/m] | $< 10^4$ | $<10^5$ |
| Pitot pressure | [hPa] | 5 – 250 | 15 – 2400 |
| Total enthalpy | [MJ/kg] | 3 – 15 | 6 – 20 |
| Cold wall heat flux | [kW/m$^2$] | < 3000 | < 14000 |
| Test duration | [s] | < 7200 | < 1800 |

# Arc Heated Facilities – Test Instrumentation

Flow characterisation:

- Laser induced fluorescence
- Diode laser absorption
- Emission spectroscopy
- Microwave interferometry
- Langmuir probes
- Pitot probes
- Heat flux sensors

Temperature measurements:

- Infrared cameras
- Pyrometers
- Thermocouples

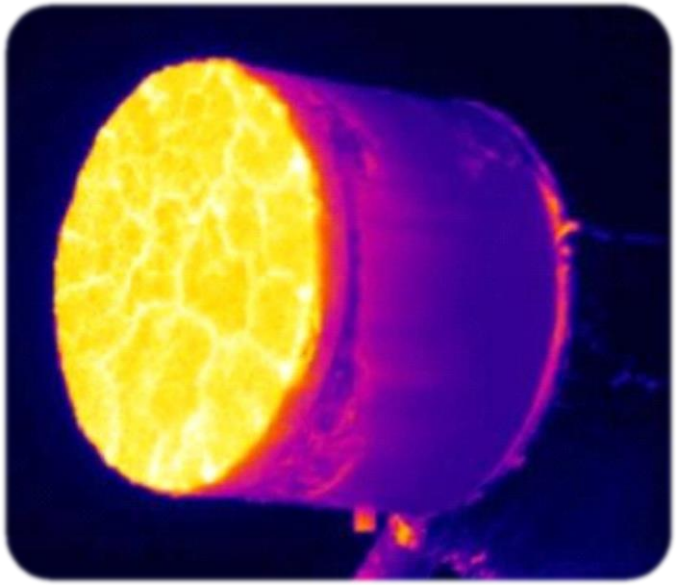

Demise observation:

- Video cameras
- High speed cameras
- Infrared cameras
- In-situ recession measurement

Heat flux characterization:

- Commercial gages (HFM, Gardon gage, …)
- In-house developed sensors (coaxial thermocouples, calorimeters)
- Inverse method (heat fluxes from temperature evolution)

# Testing Approaches and Setups

# Testing Approaches and Setups – Test Instrumentation

Typical test instrumentation includes:

- UHD camera for sample observation
- Infrared camera for surface temperature development
- Spectral and two-color pyrometers as reference
- High-speed camera in case of fast demise phenomena
- Internal thermocouples

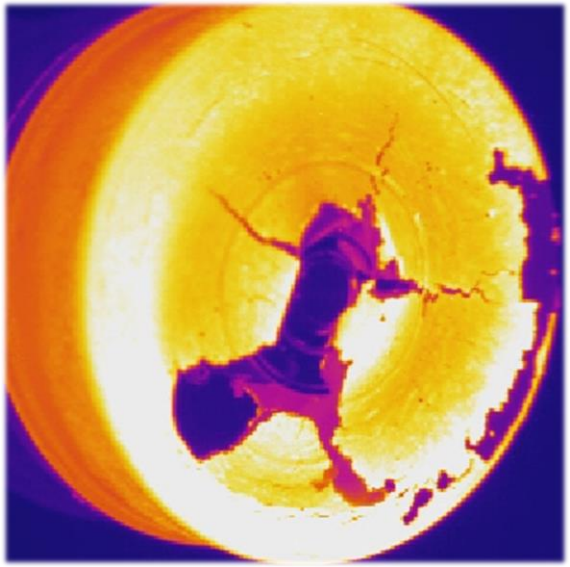

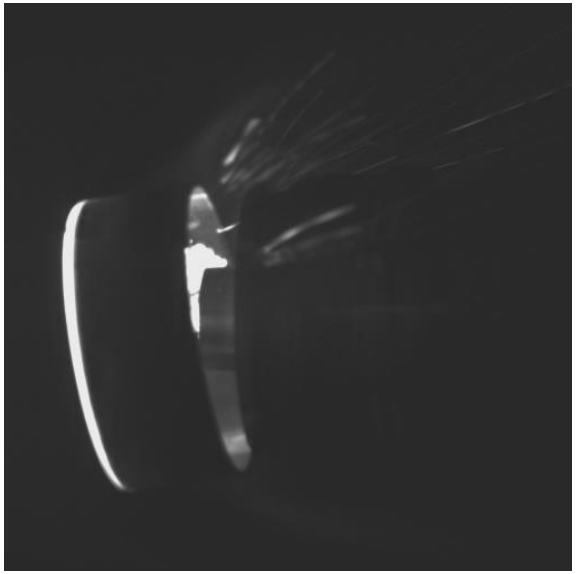

# Testing Approaches and Setups – Test Instrumentation

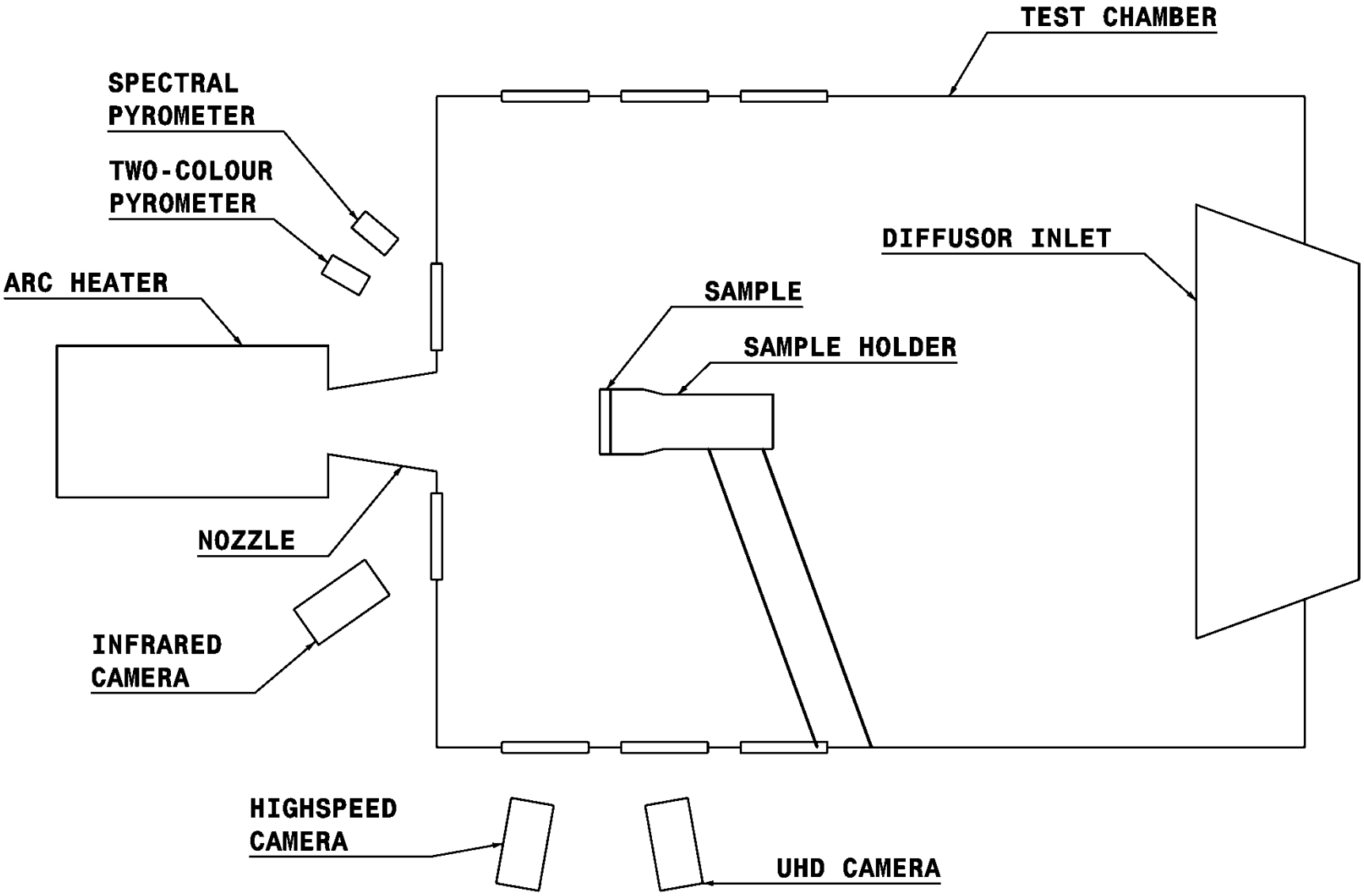

# Testing Approaches and Setups

Material demise can be driven by absorbed heat (e.g. melting or ablation of the material), applied forces (e.g. mechanical loads) or a combination thereof (e.g. shear stress assisted ablation of CFRP).

The approaches to demise testing try to separate the effects. Thus, there are three categories in wind tunnel testing:

- Material demise through heating and chemical attack (*stagnation tests*),
- material demise under additional shear stress influence (*shear tests*) and
- Testing of components or structure, potentially with mechanical loads, functional dummies etc. (*component tests*).

# Testing Approaches and Setups – Stagnation Tests

The stagnation test setup is

- a very simple setup with focus on heat driven demise of the material,
- cost efficient and possible for most materials,
- easy to rebuild numerically (axisymmetric) and
- good for validation of the numerics (allows inserting thermocouples for measuring internal temperatures).

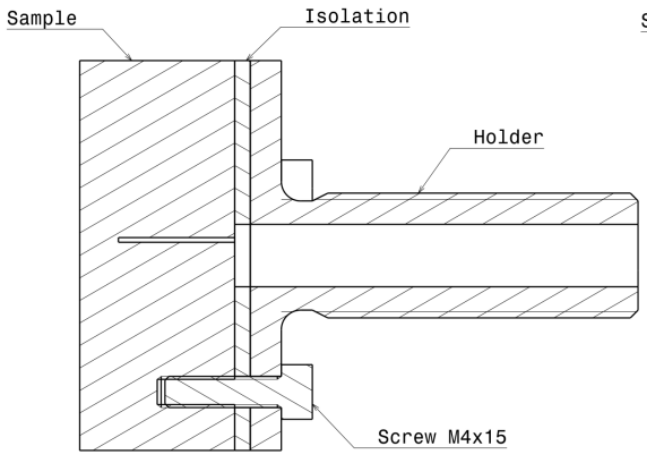


**ductile materials**

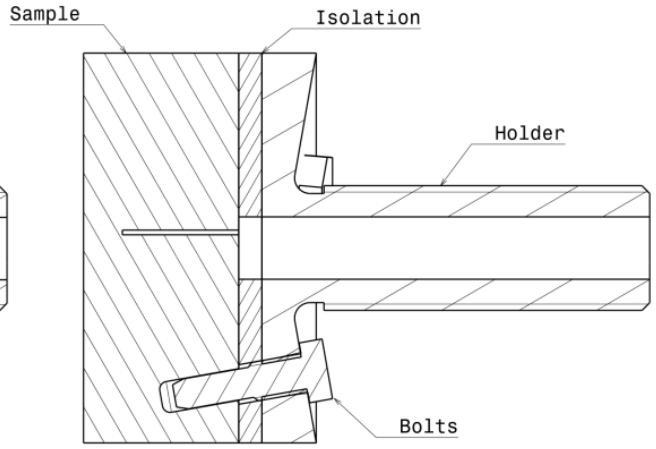


**brittle materials**

# Testing Approaches and Setups – Stagnation Tests

Example of stagnation setup testing:

Metallic sample (right), integrated (bottom left) and after the demise test (bottom right).

# Testing Approaches and Setups – Stagnation Tests

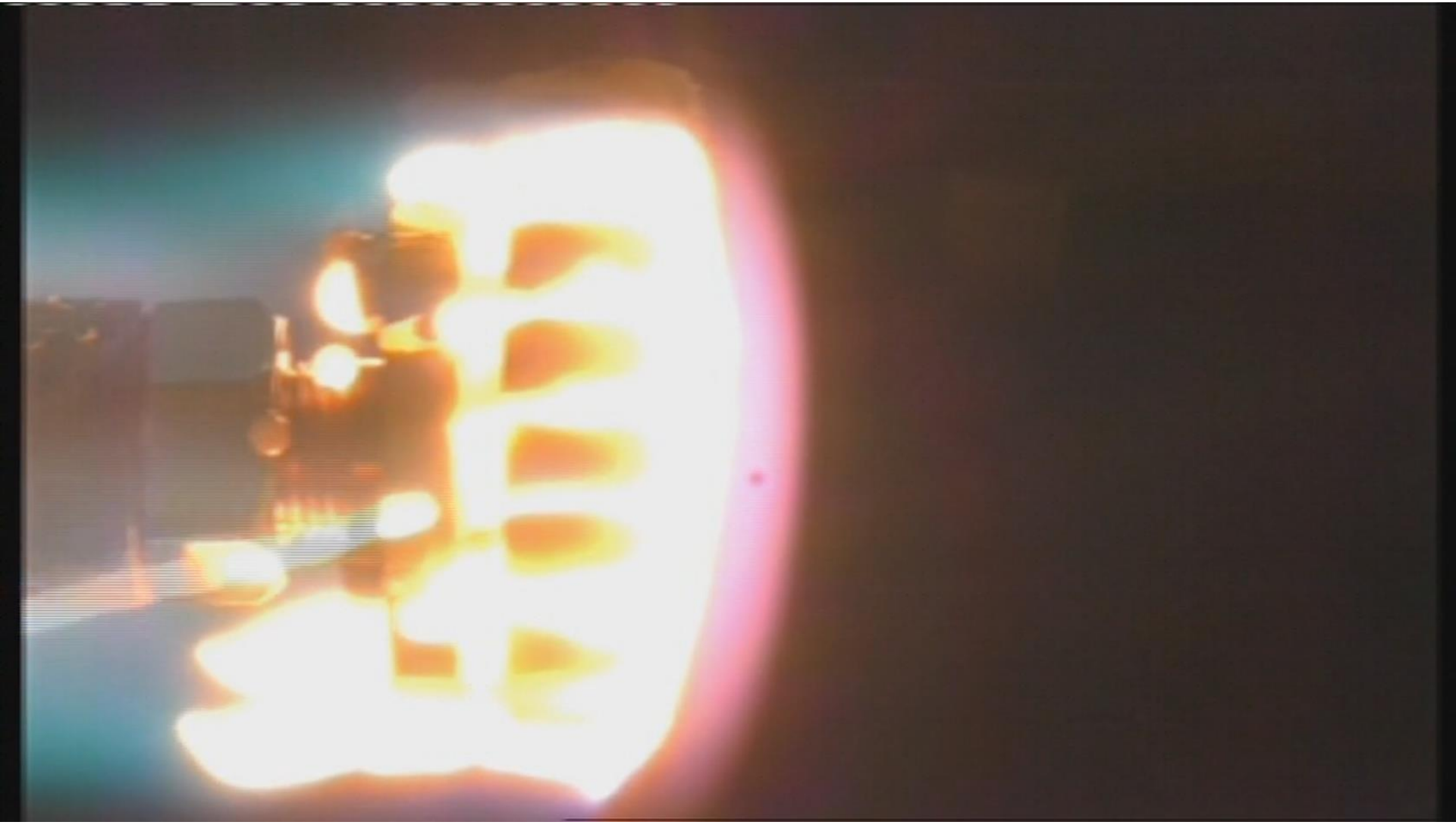

# Testing Approaches and Setups – Shear Tests

The shear test setup

- adds the effect of the shear to the material demise and
- is also very easy to rebuild numerically (2D-flow).

(Thermocouples can be added only to the back face.)

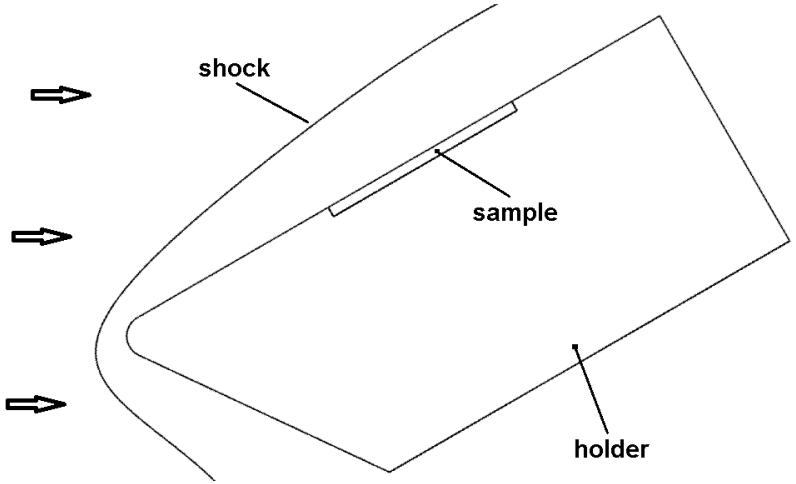


**shear setup sketch**

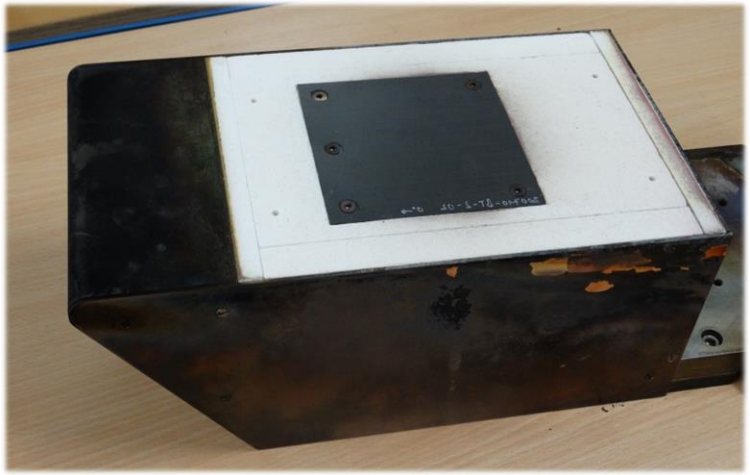

**integrated shear sample**

# Testing Approaches and Setups – Shear Tests

# Testing Approaches and Setups – Component Tests

These tests focus on more or less complex structures or components instead of simple materials. Test setups can be

- very simple in case of static testing,
- can include actuators for introducing forces or
- May have a device for spinning the sample.

**complete reaction wheel before the test**

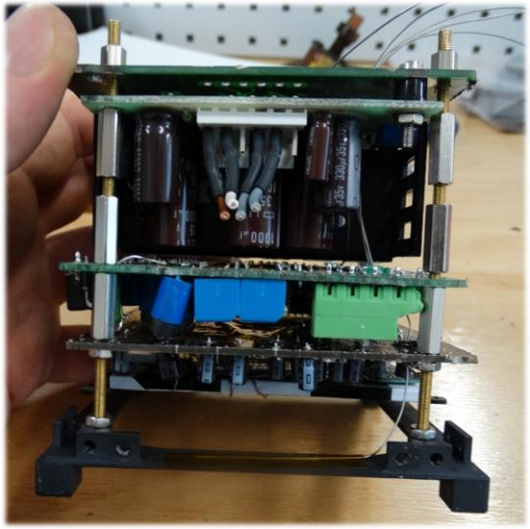

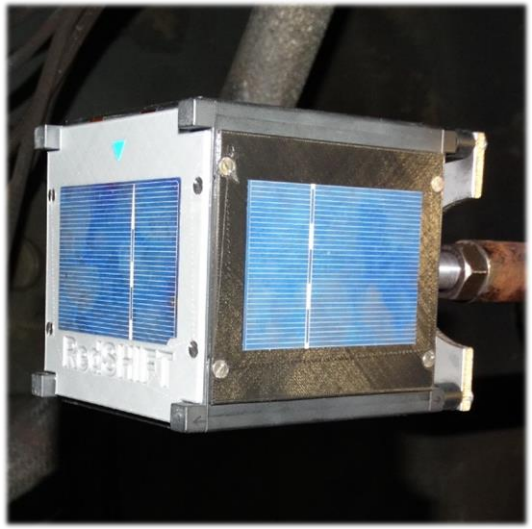

**qube satellite during (left) and after (right) integration**

# Testing Approaches and Setups – Component Tests

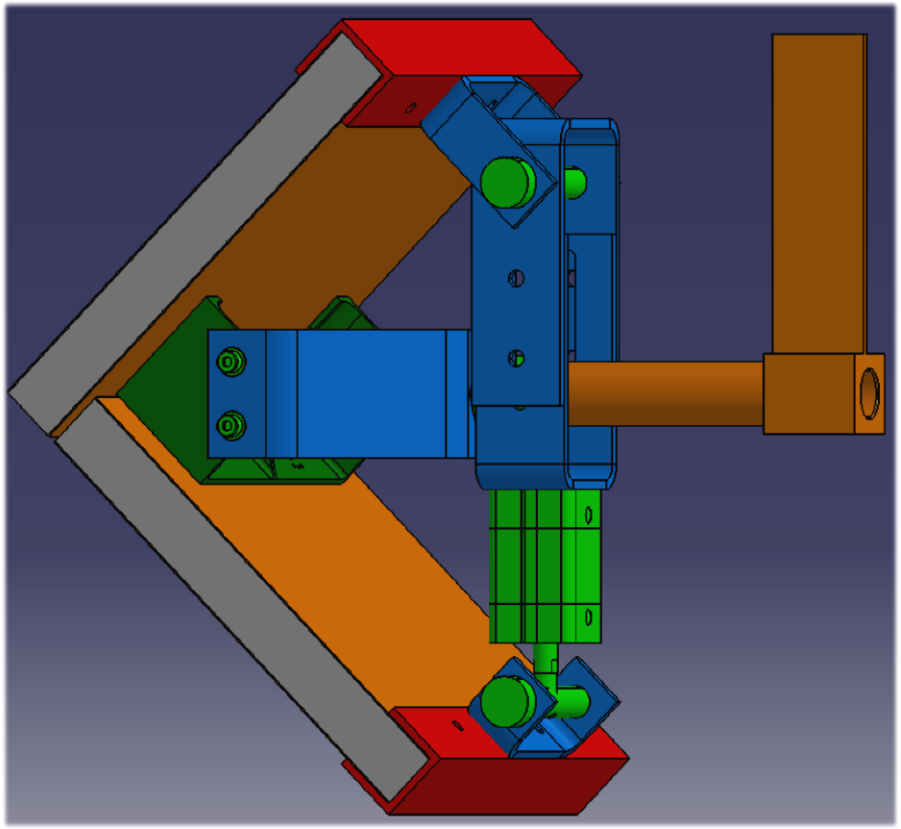

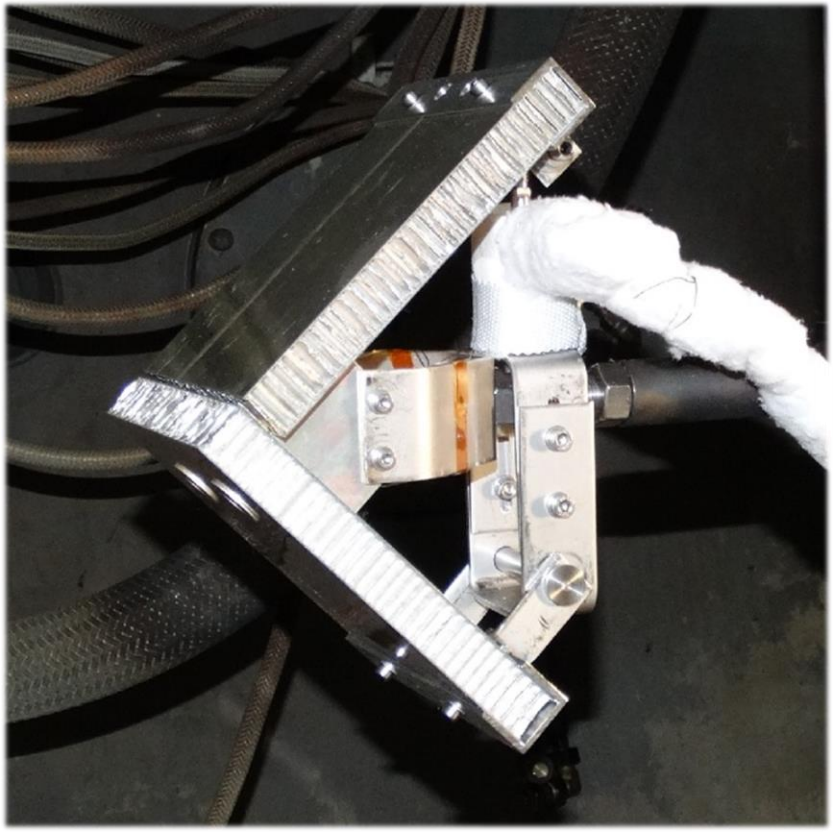

Component test example: closure panel cutouts with cleat connection and pneumatic actuator providing a defined force on that connection.

# Testing Approaches and Setups – Component Tests

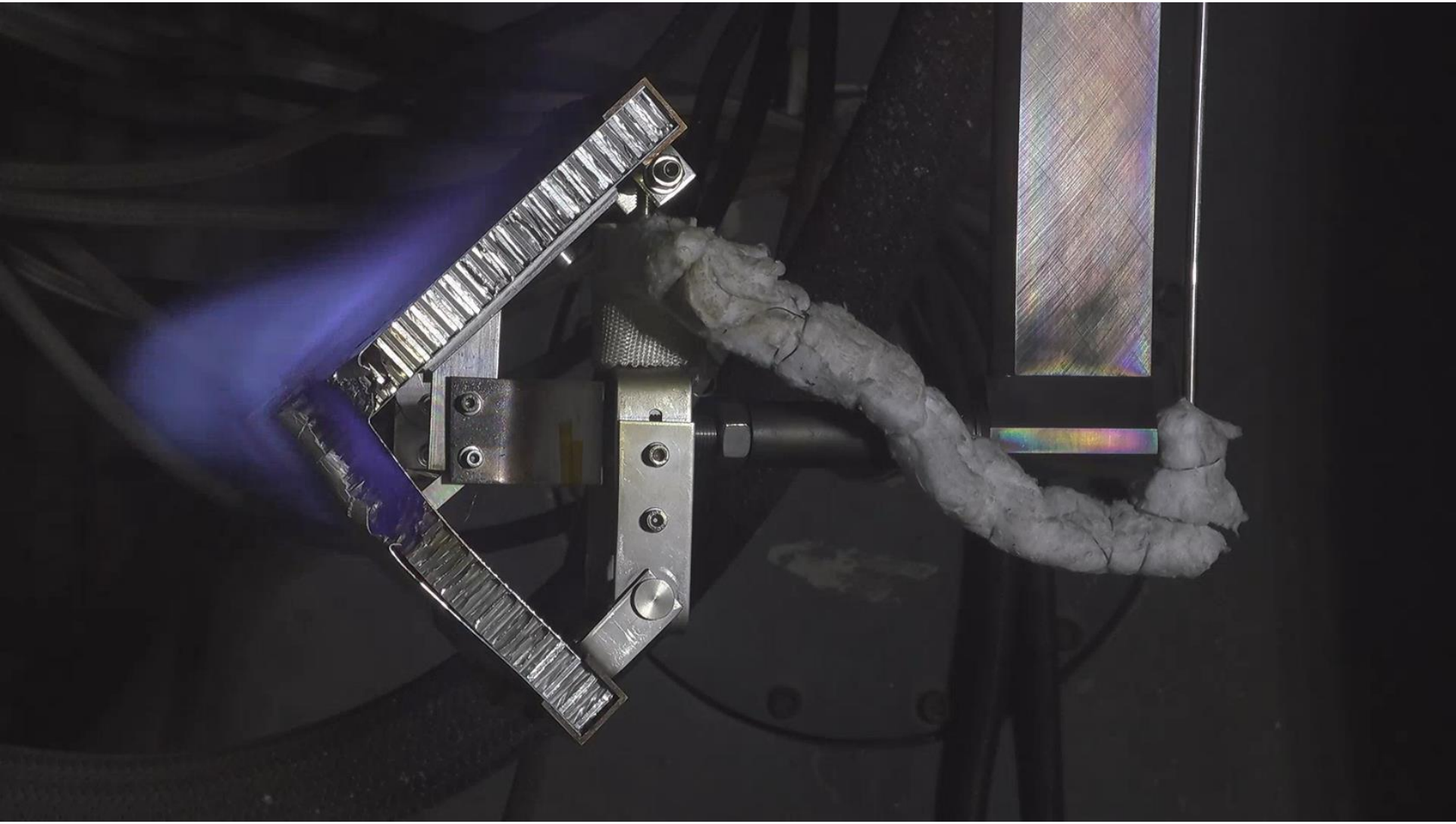

# Status and Challenges

# Status and Challenges – Status

The demisability on material level has been investigated in four test campaigns in 2001, 2007 and two campaigns within the ESA project CHARDEM in 2015.

Metals

- Steel AISI 316L
- Titatnium Ti6Al4V
- Aluminium 7075
- Invar
- Copper
- …

Others

- Silicon carbide
- Glass ceramics Zerodur
- different types of CFRP
- Sandwich panels
- Titanium CFRP composites
- …

**Silicon Carbide**

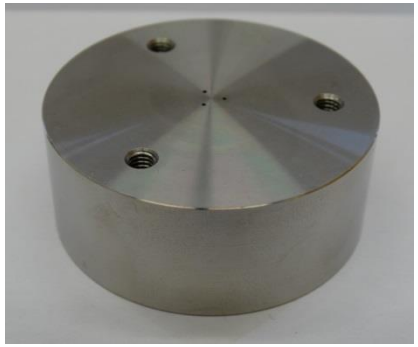

**Steel AISI 316L**

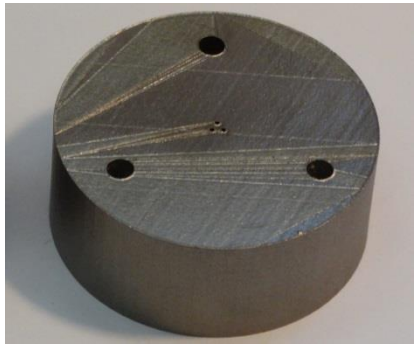

**Titanium 3D printed**

**Solar Panel**

# Status and Challenges – Status

The EU project ReDSHIFT has an holistic approach to the space debris problem and included a demisability test campaign. General problems (e.g. impact of Aluminium oxide bag) as well as component test were included.

The campaign achieved several first, such as

- first test of a complete satellite,

- first test of real spacecraft hardware (full size reaction wheel) and

- first test of thin structures (Cube sat structure, Aluminium hats, etc.).

# Status and Challenges – Status

The ESA project D4DBB focuses explicitly on panel connection and aims at increasing the demisability of these connections.

The campaign testing the samples with increased demisability is to be conducted January/February 2019.

The ESA project COMP2DEM just kicked-off. The project focuses explicitly on the understanding of the demise of FRP and, in a second phase, the development of FRPs with improved demisability.

A proposal for another project was successful. ESA project DEPT is about to start. The project aims at developing a demisable aluminum tank. Different aluminum alloys and a spinning cylinder will be tested.

# Status and Challenges – Challenges

Major currently remaining challenges:

- Other categories need to be characterized (e.g. Glasses, Minerals).
- It is still questionable whether a single alloy is representative for the material category (→ DEPT).
- CFRP is not understood and not predictable yet (→ COMP2DEM).
- Surface chemistry is neither understood nor simulated and can have an significant impact (very complicated, future topic?).
- Several relevant processes have not been addressed at all (e.g. random tumbling motion – test total or average heat flux? → DEPT).
- Mechanical demise augmentation is still quite untouched ,e.g. the aerodynamic or inertial (→ DEPT) forces.

→ Demise testing and understanding is still in its infancy!

**Thank you for your attention!**