CSP Development
Status and Trends

Dipl.-Ing. Klaus Hennecke
DLR Institute of Solar Research
klaus.hennecke@dlr.de

DLR

Content

- Worldwide Market Overview
- Review of Research and Development
  - Efficiency Increase
  - Investment Cost Reduction
  - Operation and Maintenance Improvements
  - Support to improve Financing Conditions
- Summary and Conclusions

CSP in the worldwide power market

Installed capacity by 2015:

- CSP: 4,8 GW
- PV: 234 GW
- Wind: 432 GW
- Hydro: 1064 GW

Total generating capacity worldwide (2012): 5550 GW

CSP assessment:

- Still at beginning of the learning curve
- Unique selling point: dispatchable power
  - Storage
  - Fuel back-up

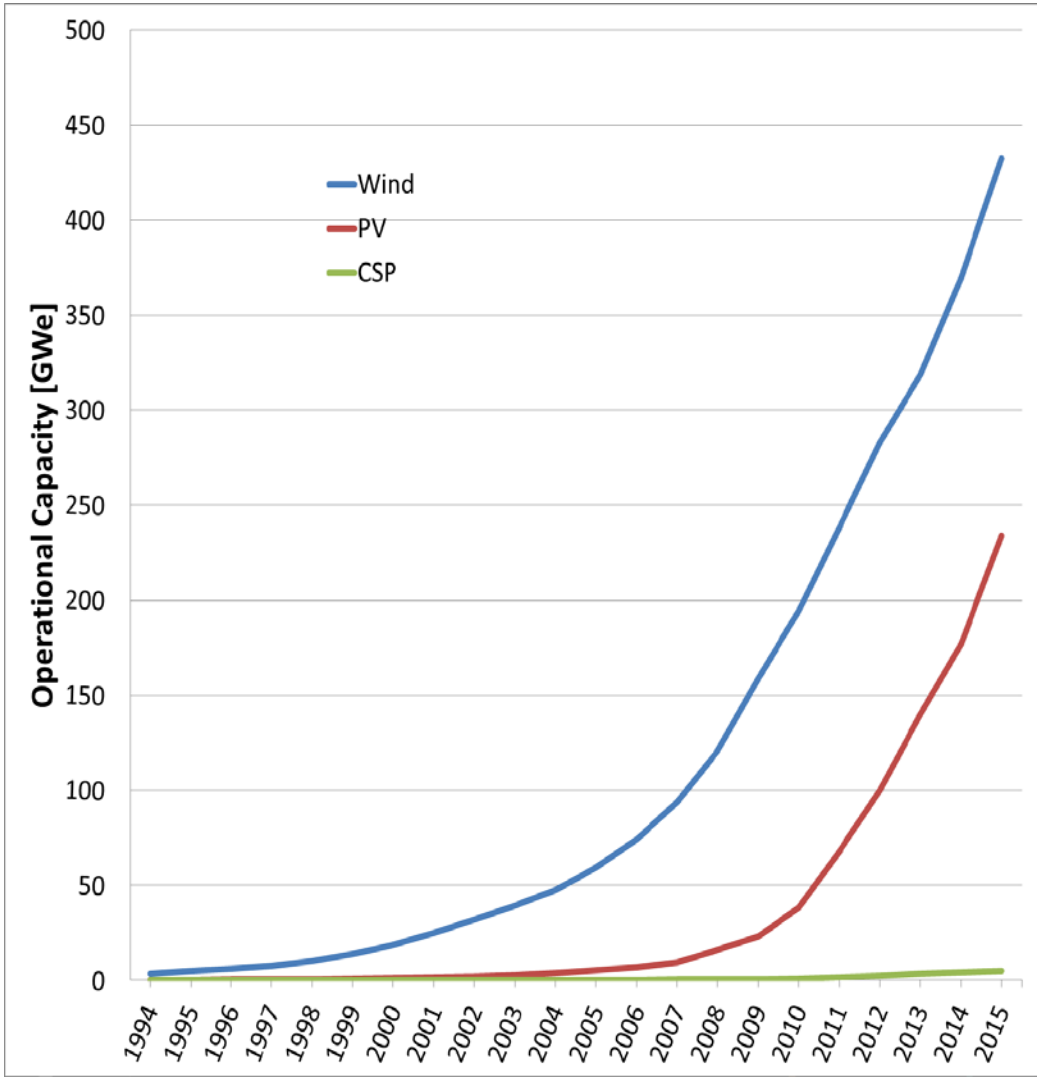

CSP projects and plants worldwide overview

Status July 2016

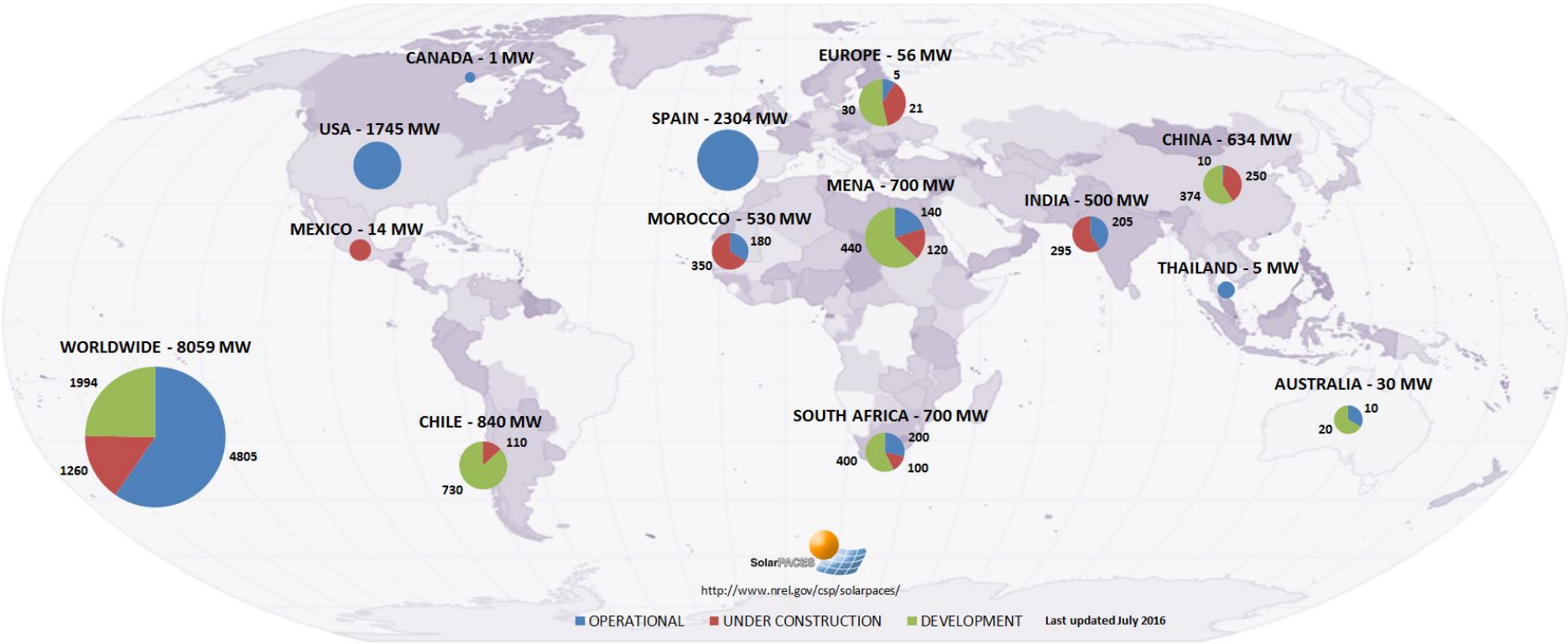

- Operational: 4805 MW
- Under Construction: 1260 MW
- Project Development: 1994 MW

DLR

CSP technology representation in the market

Status July 2016

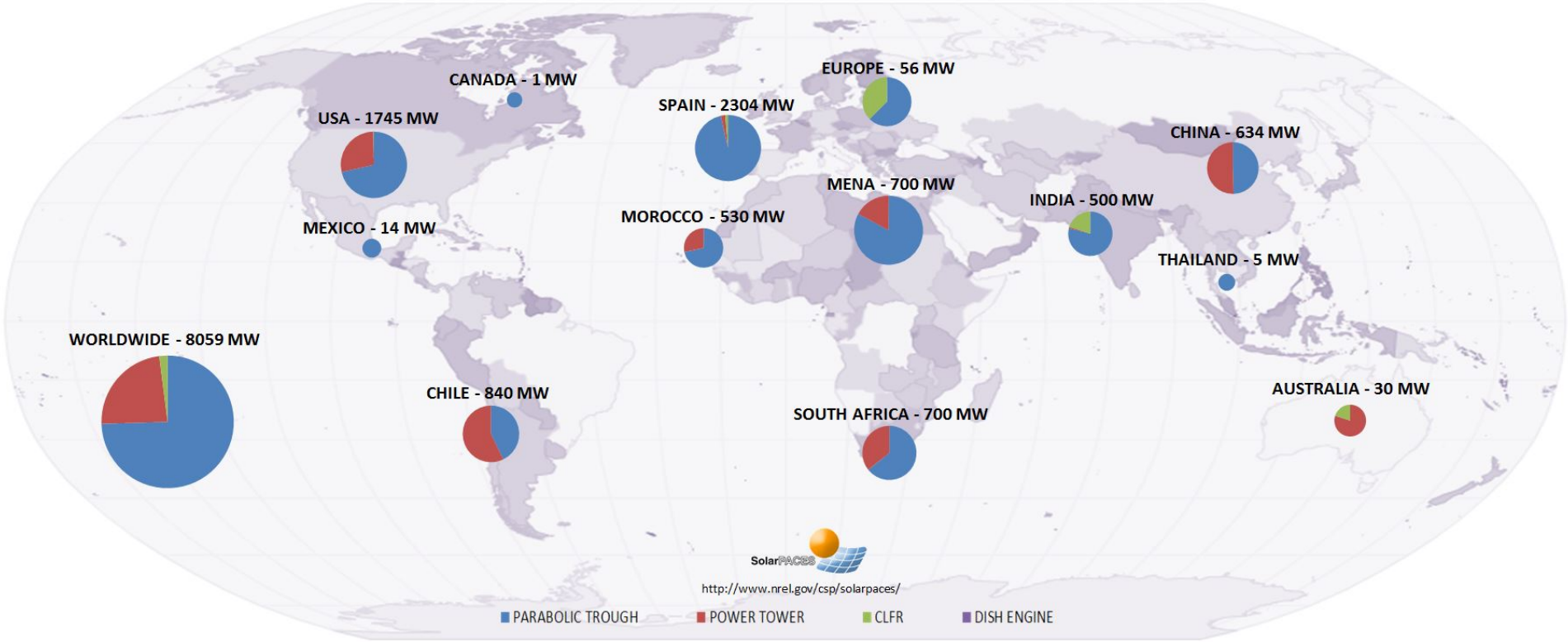

- Parabolic trough dominating
- Power Tower coming up
- Some Linear Fresnel
- Dish negligible

DLR

Commercial Parabolic Trough Technology Solana, Arizona, USA

- Thermal Oil
- 280 MWe
- 6h storage (molten salt)

-Abengoa

Commercial Tower Technology
Crescent Dunes / Tonopah, Nevada, USA

- Molten Salt
- 110 MWe
- 10 h Storage

Solar Reserve

Commercial Tower Technology
Ivanpah, California, USA

- Steam
- 3x125 Mwe

- No storage!

-Brightsource

CSP cost reduction potential

Study by DLR under contract from and in co-operation with IRENA

- Present LCOE: 15-19 $ct/kWh depending on DNI and financing conditions
  - Published reference values NOOR ppa: 14-15 $ct/kWh
- LCOE below 10 $ct/kWh achievable by 2025
- Main drivers for LCOE reduction
  - Efficiency increase
  - Solar field cost reduction
  - Improved operation and maintenance
  - Improved financing conditions – “bankability“
- For details and comparison to other renewables refer to
  - IRENA: The power to change: Solar and Wind cost reduction potential to 2025 (download: www.irena.org/publications)
  - Dieckmann et.al.: LCOE reduction potential of parabolic trough and solar tower CSP technology until 2025, SolarPACES2016 AbuDhabi, Oct.11-14, 2016

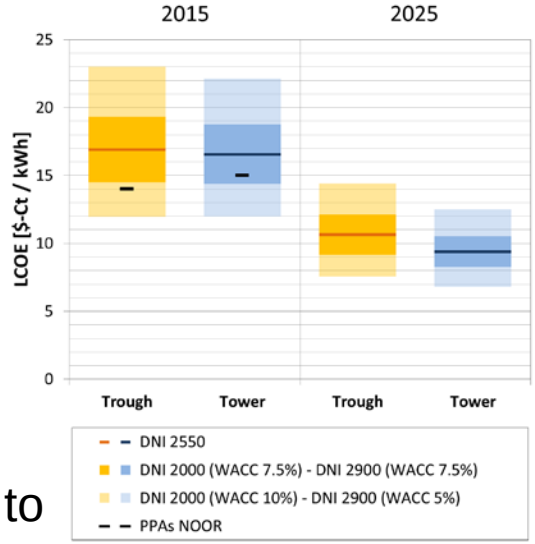

CSP current R&D activities

My personal selection from SolarPACES 2015, Capetown

- Efficiency increase
  - Increased temperature
    - New heat transfer media
    - New power cycles
- Solar field cost reduction
  - Collector design optimization
    - Heliostat optimization
- Improved operation and maintenance
  - Optimized control and operating strategies
    - Dynamic modelling, control and operation optimization
- Improved financing conditions – “bankability”
  - Reduce risks and uncertainties
    - Quality assurance and standards

For details and references refer to: Proceedings of SolarPACES 2015 International Conference on Concentrating Solar Power and Chemical Energy Systems, Capetown Oct. 13-16 2015 http://scitation.aip.org/content/aip/proceeding/aipcp/1734

Efficiency increase

New heat transfer media

- Improved thermal oil for higher temperature (Parabolic trough)
  - No system change, limited potential (up to 450°C approx)
- Direct steam Generation (Power tower, Parabolic trough, Linear fresnel)
  - Commercial plants realized without storage
  - Once-through process for cost reduction
  - High research activities for cost-effective steam storages
- Liquid Metal (Power tower)
  - Good heat transfer characteristics for high flux / high temperature systems, but safety concerns
- Particles (Power tower)
  - Direct absorption and storage for high temperature systems
  - Medium to long term research activities
- Molten salt (Power tower, Parabolic trough, Linear fresnel)
  - Commercial in power tower, good Rankine cycle efficiency, cost effective storage

Efficiency increase

New heat transfer media: Molten salt

<u>R&D on open issues in line-focus systems</u>

- Freeze Protection

  Eickhoff et al.: New operating strategies for molten salt in line focusing solar fields – daily drainage andsolar receiver preheating

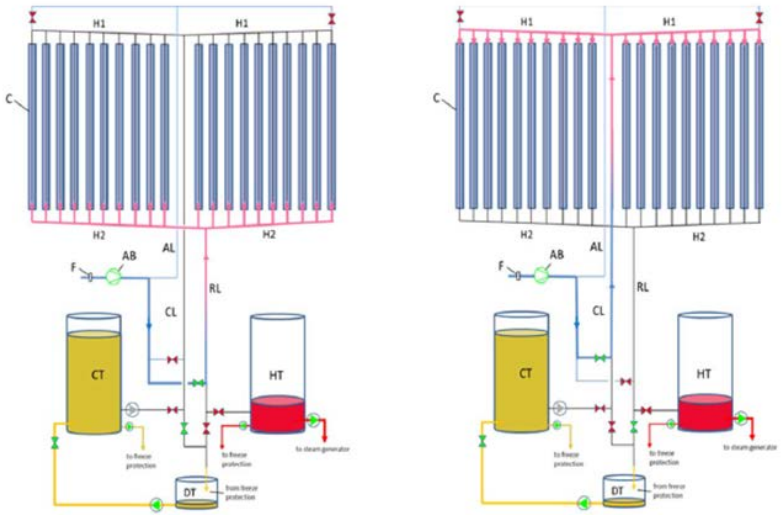

- Experimental facilities and experience

  Gaggioli et al.: Effects assessment of 10 functioning years on the main componets of the molten salts PCS experimental facility of ENEA

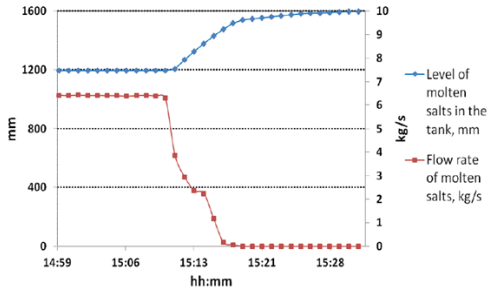

- System integration

  Seubert et al.: Analysis of a helical coil once-through molten salt steam generator: Experimental results and heat transfer evaluation

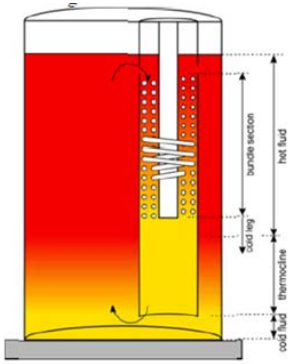

Efficiency increase

New power cycles

Supercritical CO_2 brayton cycle

Supercritical CO_2 Brayton Power Cycle For Molten Salt Receivers

Liu Sijie and Yann Le Moullec

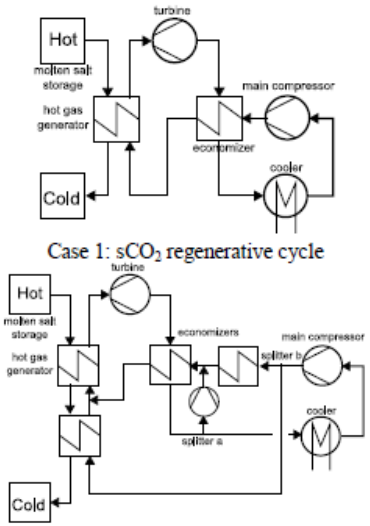

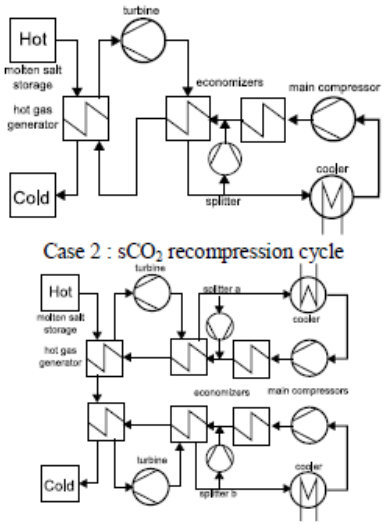

Supercritical steam cycle

Dynamic modeling of concentrated solar power molten salt tower system with supercritical steam and with Thermal Energy Storage

Baligh El Hefni[a]

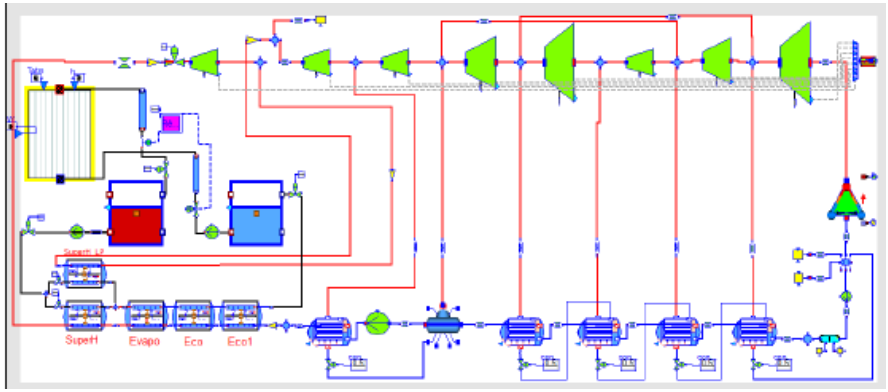

Solar field cost reduction

Heliostat optimization

- Commercial systems from 1m² to 140m²
- Size optimization
  - Structure costs proportional r^3
  - Actuator costs, foundations, controls etc. $<r^2$
- Optimization study by SBP concludes 40-60m²

  Balz et.al.: Stellio – development, construction and testing of a smart heliostat
- Factors motivating choice of smaller units:
  - Small modular towers need smaller heliostats
  - Optics for future higher T processes (Brayton, Fuels etc.)
  - Easier to prototype
  - Mass production volumes reached with smaller total field sizes

Summary based on K. Lovegrove: Trends in concentrating solar collectors, Presentation at SolarPACES 2015, Capetown

Improved operation and maintenance

Dynamic modelling, control, operation optimization

- Numerical models and investigations
  - Jiahui et al.: Numerical molten salt tower STE plant model
  - Qiang et al.: Simulation and experimental research of 1 MWe's solar tower power plant in China
  - Bubolz et al.: Influence of spatio-temporally distributed irradiance data input on temperature evolution in parabolic trough solar field simulations
  - Many more!
- Meteorological input
  - Hirsch et al.: Direct Normal Irradiance nowcasting methods for optimized operation of concentrating solar technologies (DNICast)

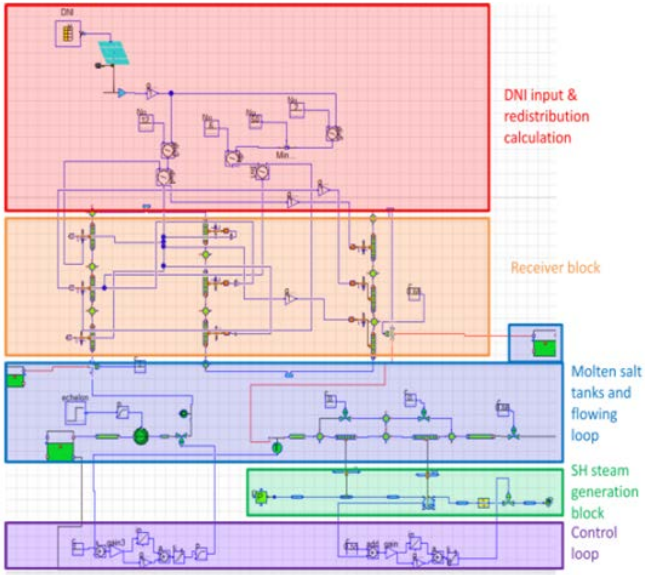

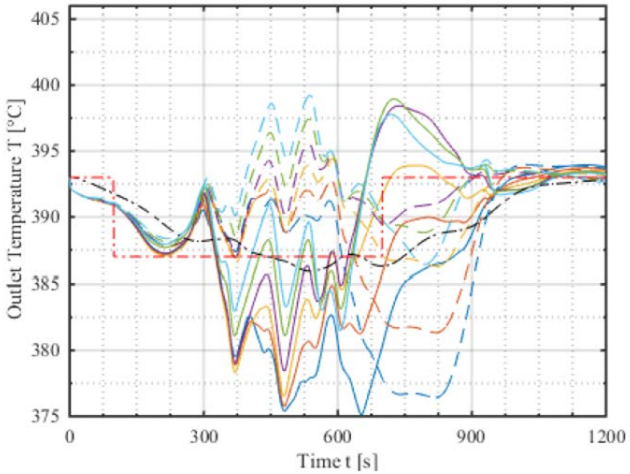

Improved financing conditions – “bankability”

Quality assurance and standards

Steps towards a CSP Yield calculation guideline: A first draft for discussion in the SolarPACES working group *guisSmo* (Hirsch et al.)

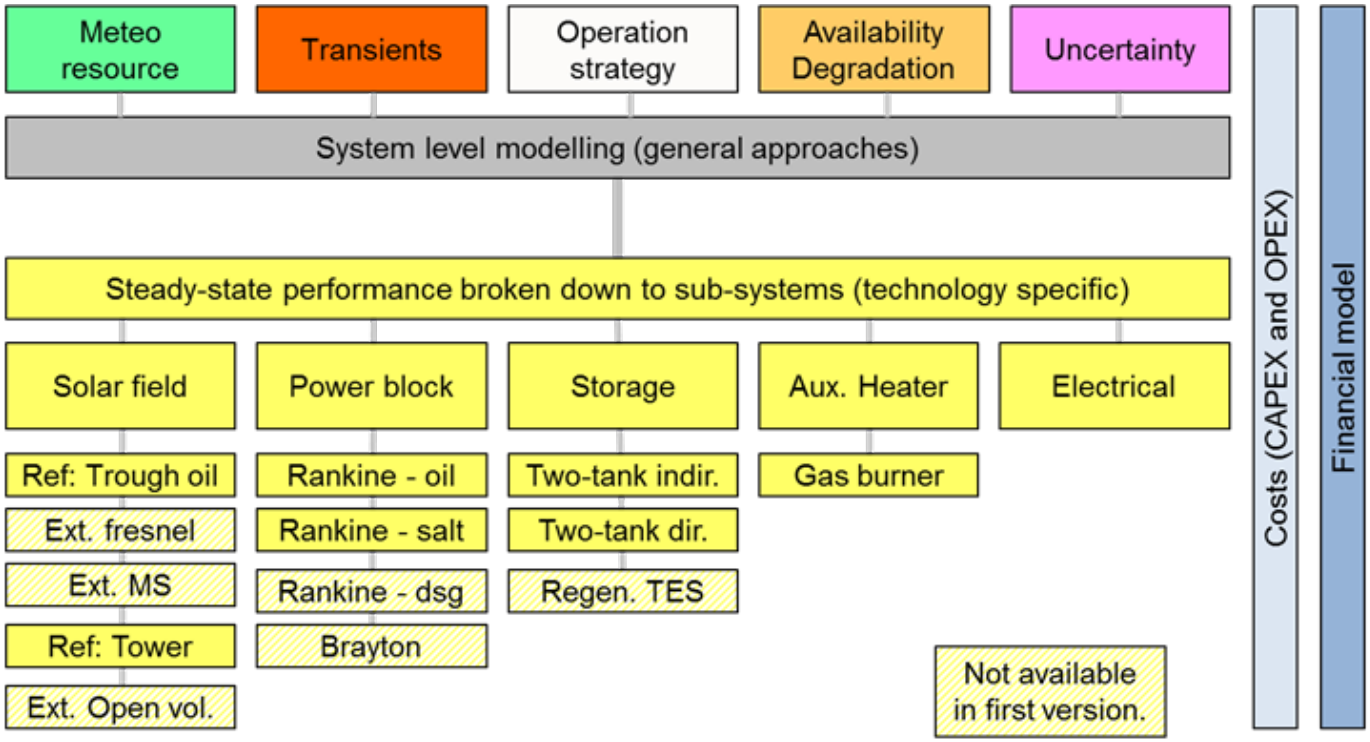

CSP current R&D activities

Other prominent issues

- Industrial solar process heat and decentral CSP applications
- New mirror materials
  - Polymer films or Aluminium, durability issues
- Receivers
  - Parabolic trough: higher temperatures, durability issues
  - Tower: Great variety of receiver types for different media, detailed investigation on losses and their mitigation
- Thermal/Thermochemical Energy Storage
  - Sensible: molten salt, cheap solid materials
  - Latent: cost reduction, de-coupling of storage capacity from heat exchanger size
  - Thermochemical: Materials research and labscale demonstrators
- Solar Fuels
  - Different approaches for long term vision

Oroz et al.: Low-Cost Small Scale Parabolic Trough Collector Design for Manufacturing and Deployment in Africa

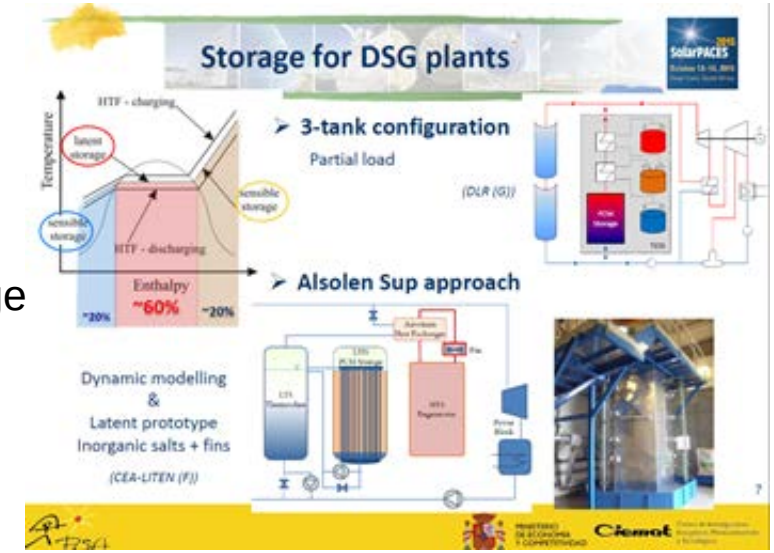

Rojas: Thermal/Thermochemical Energy Storage at SolarPACES 2015

Summary and Conclusions

- CSP will have an important role in a renewables based energy system
  - Dispatchable power to cover residual load and stabilize the grid

- R&D activities to support near term market deployment
  - System trend: Molten salt, direct storage, Rankine cycle
  - Potential conflict: innovation versus “bankability”

- Long term research on solar fuels
  - Synergies with high temperature developments for power generation

- CSP is still at the beginning of the learning curve
  - Research and development must go on
  - Joint efforts needed to transfer innovation quickly into applications
  - Reference installations facilitate “bankability”
  - This still needs financial and regulatory support