Simulation of Hybrid Solar Power Plants

S. Dieckmann, J. Dersch

(German Aerospace Center, DLR)

SolarPACES Conference
Abu Dhabi
October 11-14, 2016

DLR

Content

1. Introduction
2. CSP Trough / Tower Hybrid Plant
3. CSP / PV Hybrid Plant

Sources: wind-solarstrom.com, cnn.com, pinterest.com

1. Introduction

- No ISCC plants, but solar/solar hybrid configurations
- Motivation
  - Retrofit of parabolic trough plant with solar tower
  - Combine low-cost PV with dispatchable CSP
- Method
  - Technical simulation and economic calculations with **greenius***
  - Heliostat field calculated with internal tool HFLCAL
  - Lookup tables for power block created using Ebsilon Professional™
  - Costs according to a joint study with IRENA**

*: available free of charge at freegreenius.dlr.de

**: Presentation „LCOE reduction potential of parabolic trough and solar tower CSP technology until 2025", Tuesday, Oct 11, 4:15pm, Meeting Room 3+4

2. Trough / Tower Hybrid – RESOL Project

- Project RESOL – Retrofitting solar thermal power plants
  - 50MW parabolic trough plant at end of economic life time
  - Solar tower addition cost-efficient compared to simple overhaul
  - Screening of integration concepts for solar tower
  - Detailed cost estimation for overhaul and retrofit
  - Yield analysis and economic evaluation
- Basic approach with focus on system model
  - Test the newly developed hybrid option of **greenius**
- Boundary conditions
  - Solar Only Operation
  - Location: Guadix, Spain, 37°N, annual DNI 2111 kWh/m²
  - Interest rate: 5.4%

2. Trough / Tower – System Overview

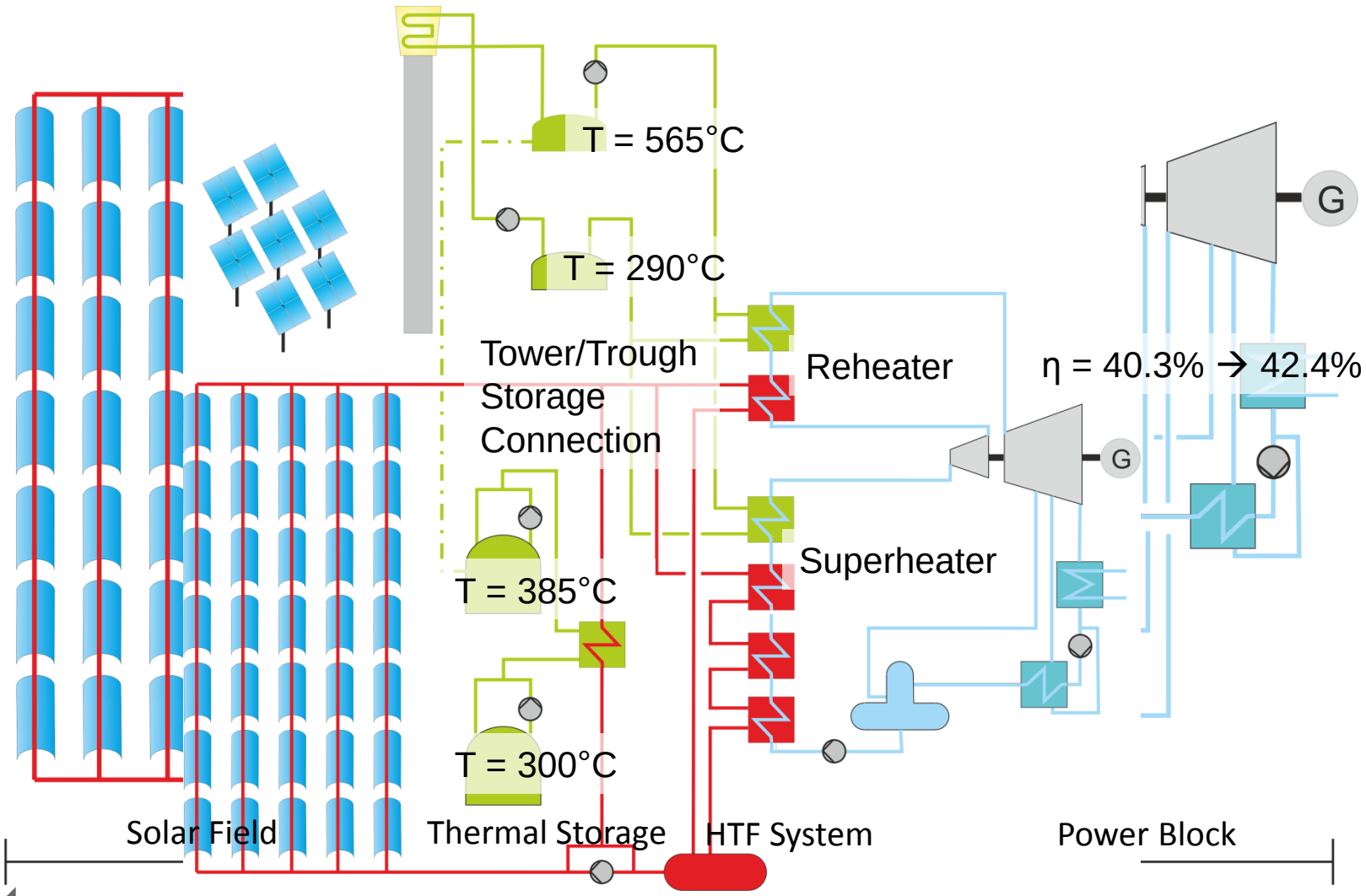

2. Trough / Tower – Technical Data Overview

Parameter	Tower Reference	Trough-Tower Hybrid	Unit
Trough aperture area	-	510,120	m²
Trough nominal thermal output	-	274	
Tower aperture area	759,648	199,184	m²
Tower nominal thermal output	396	116	MW
Net Storage capacity at 383°C / 565°C	0 / 1280	940 / 340	MWh
Nom. PB thermal input at 393°C / 565°C	0 / 151.8	112.5 / 41.4	MW
Nominal gross electricity output	65.9	65.2	MW
Nominal power block efficiency	43.4	42.4	%

2. Trough / Tower – Hybrid Plant – Output Profiles

Thermal Trough / Tower ratio	
Nominal PB Input	2.7 / 1
Summer output	2.9 / 1
Winter output	1 / 1

- Trough-Only operation at reduced thermal efficiency
- LCOE optimized size reaches nominal output ratio in summer
- Significant seasonal output imbalances for high latitudes

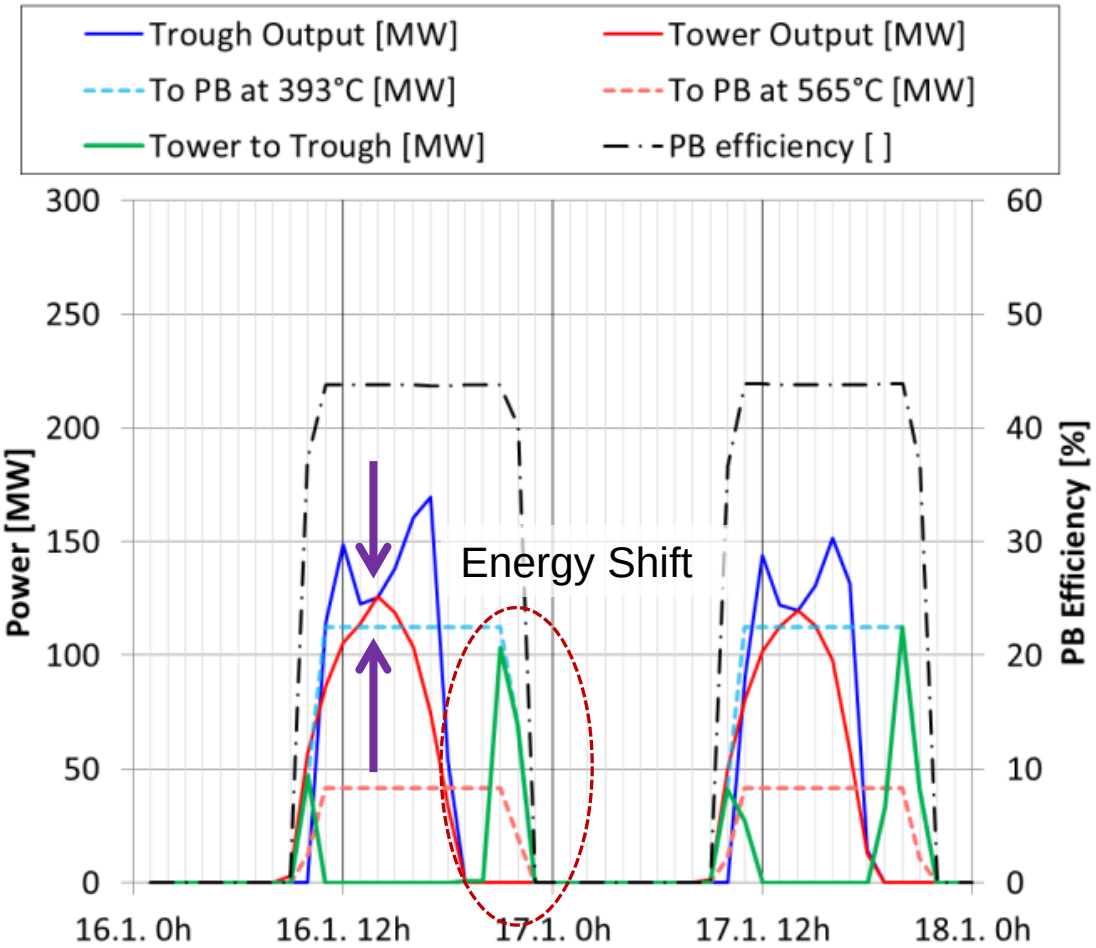

2. Trough / Tower – LCOE Comparison

Parameter	Tower Reference	Trough-Tower Hybrid	Unit
Total investment cost	412	207	Mio. $
Net electricity output	290,914	239,835	MWh
LCOE	**143**	**104**	**$/MWh**

- Basic cost assumptions:
  - Trough system overhaul: 20% of turn key cost for new solar field and thermal storage
  - Power block retrofit: 60% of turn key cost for new power block
- Annual output of tower reference higher due to smaller seasonal variation
- Retrofitted power plants have attractive LCOEs
- Next step: Compare *tower retrofit* with *continue operation* scenario after detailed cost analysis

3. Hybrid CSP / PV power plants

- Motivation: Combine cheap PV with dispatchable CSP
- Location: Plataforma Solar de Almería (Annual DNI: 2418 kWh/m²)

- Load profile:
  - 8:00-23:00 40 MW
  - 23:00-8:00 0 MW
- Excessive PV output covers parasitics of CSP system

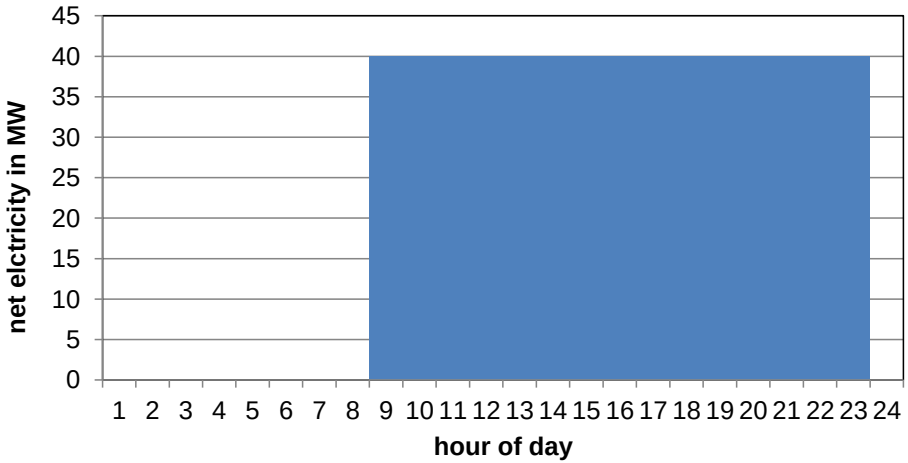

- Method:
  - Successive two-step annual simulation using **greenius**
  - PV output has priority
  - Solar only operation

3. CSP / PV – System Design

- Hybrid plant
  - CSP with Parabolic Trough Technology with $T_{HTF,max}$ = 393°C
  - CSP dimensioned based on LCOE optimization with residual load

	PV	CSP	Unit
Nominal (gross) Capacity	53	50	MW
Maximum net output	50	44.5	MW
CSP Storage Capacity	0	640 (≈5h)	MWh
No. Loops	N/A	65	-

- PV Reference: identical to PV part in hybrid system
- CSP Reference : 110 Loops, 520 MWh thermal storage capacity

3. CSP / PV – Solar Electricity Production – Summer Day

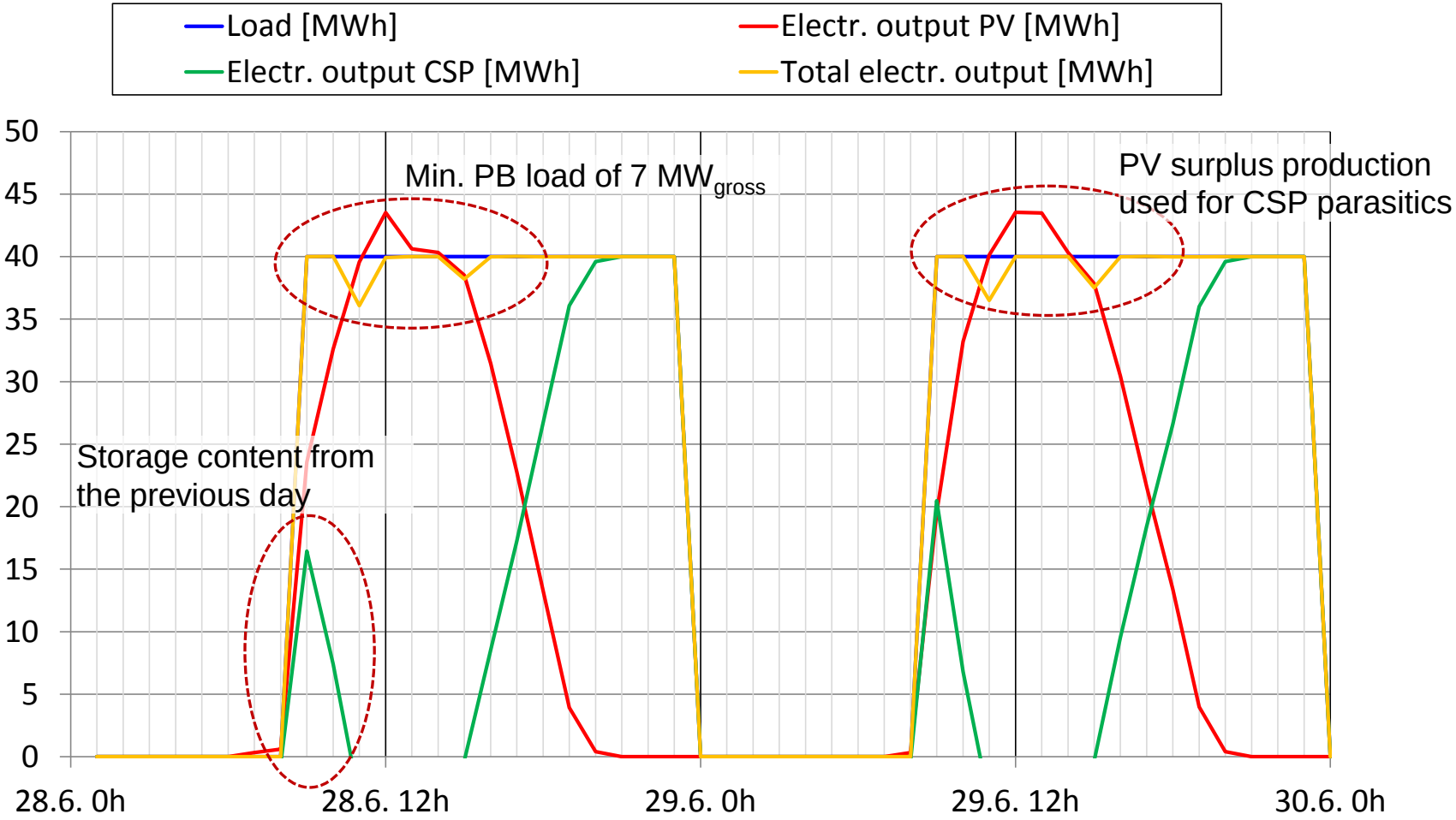

3. CSP / PV – Annual Electricity Production and CAPEX

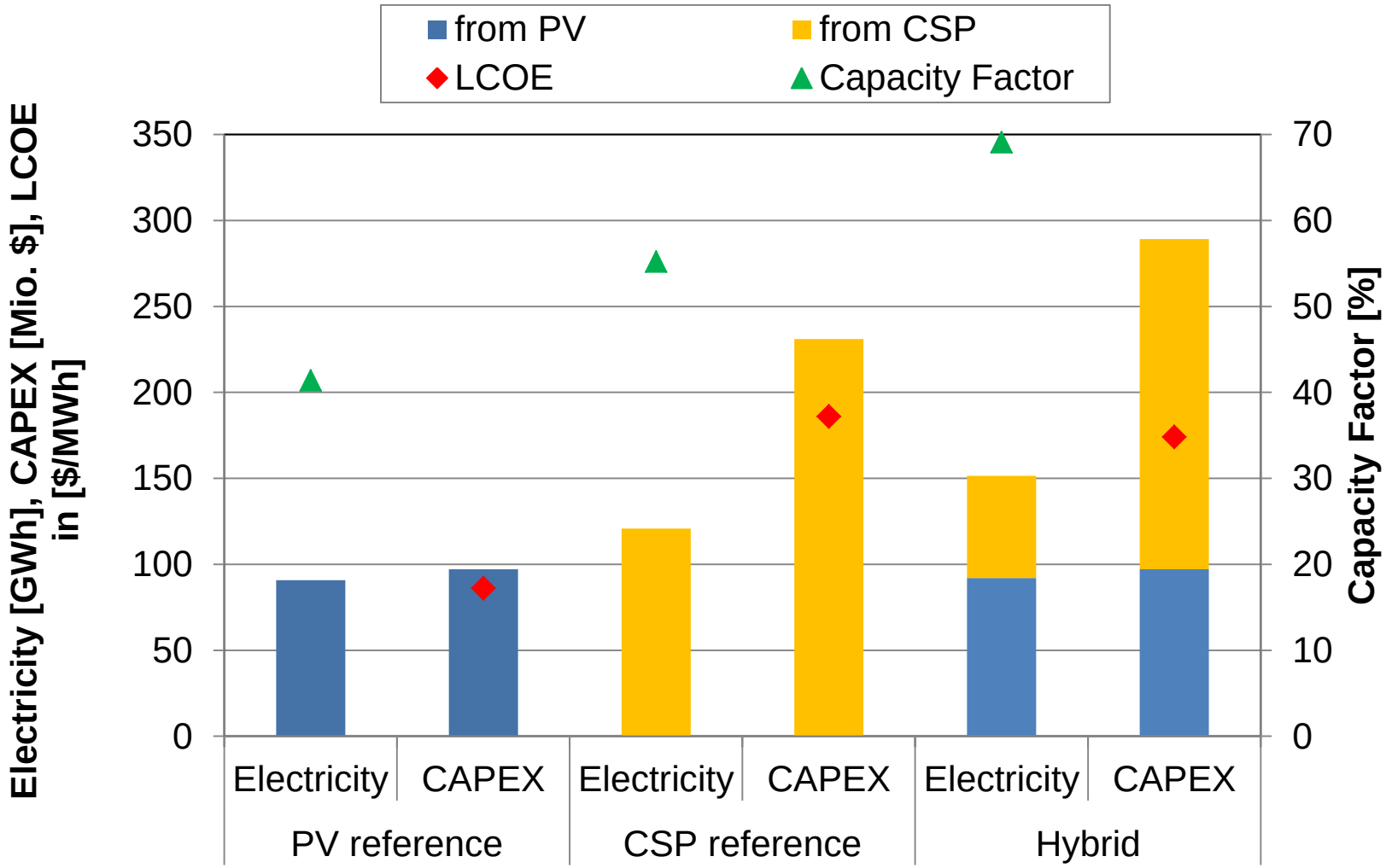

3. CSP / PB – Summary and Conclusions

- LCOE of the hybrid plant is not an weighted average of the standalone plants!
- PV / CSP hybrids are a cost-efficient solar-only option to reach high capacity factors up to 70% at limited costs
- Minor LCOE reduction compared to CSP only: 186→174 $/MWh
- An option for hybrid projects may be added to **greenius** in the future and replace two-step approach

→ Follow us: freegreenius.dlr.de

greenius

THE GREEN ENERGY SYSTEM ANALYSIS TOOL

We gratefully acknowledge the financial support from the German Federal Ministry for Economic Affairs and Energy for the project „RESOL - Retrofitting Solarthermal Power Plants“, contract no. 0325511.

Supported by:

Federal Ministry for Economic Affairs and Energy

on the basis of a decision by the German Bundestag

THANK YOU

for your attention!

Contact:

Simon Dieckmann
German Aerospace Center (DLR)
Line Focus Systems

Simon.Dieckmann@dlr.de

DLR

Trough / Tower Cost Data

Component / Parameter	Tower Reference	Trough-Tower Hybrid	Unit
Heliostat field	197	197	$/m²
Central receiver	173	173	$/kW
Tower	124,200	124,200	$/m
Thermal storage at 565°C	36	36	$/kWh
Power block	1753	1010	$/kW
Parabolic trough solar field	-	64	$/m²
Thermal storage at 383°C	-	12	$/kWh
Land cost	1	1	$/m²
Interest rate	5.4	5.4	%

2. Trough / Tower – Annual Yield – Typical Winter Day

- Peak Trough / Tower Output ratio: 1 / 1
- Significant seasonal imbalances of the plant for high latitudes
- Significant afternoon energy shift from tower to trough

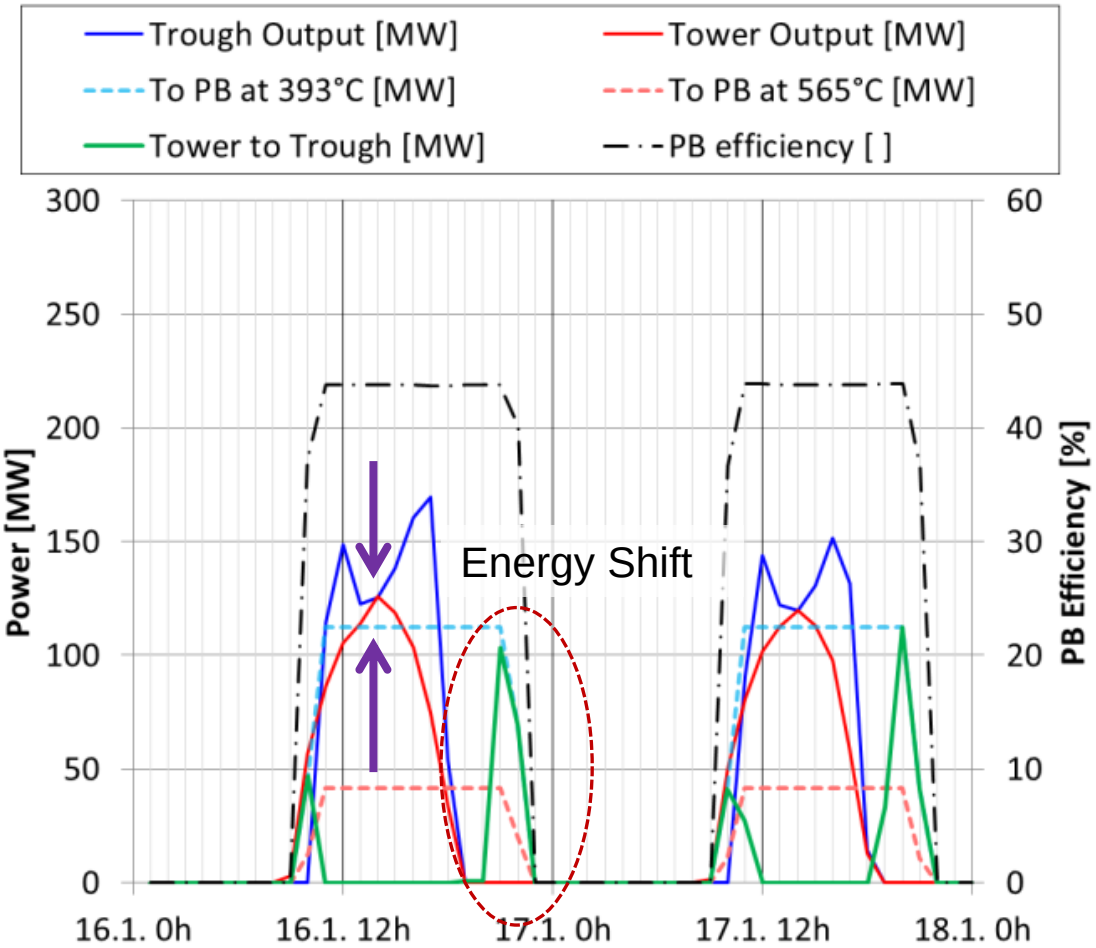

3. CSP / PV – Solar Electricity Production – Winter Day