Available online at www.sciencedirect.com

SciVerse ScienceDirect

Energy Procedia 00 (2013) 000–000

Energy Procedia

www.elsevier.com/locate/procedia

SolarPACES 2013

High-Temperature Thermal Storage System for Solar Tower Power Plants with Open-Volumetric Air Receiver Simulation and Energy Balancing of a Discretized Model

Valentina Kronhardt[a,1], Spiros Alexopoulos[b], Martin Reißel[c], Johannes Sattler[d], Bernhard Hoffschmidt[e], Matthias Hänel[f], Till Doerbeck[g]

[a]*Dipl.-Math., Research Assistant, Solar-Institut Jülich (SIJ), Aachen University of Applied Sciences, Heinrich-Mussmann-Str. 5, 52428 Jülich, Germany*
[b]*Dr.-Ing., Head of Division Renewable Energies, Solar-Institut Jülich (SIJ), Aachen University of Applied Sciences, Germany*
[c]*Prof. Dr.rer.nat., Board of Solar-Institut Jülich (SIJ), Aachen University of Applied Sciences, Germany*
[d]*Dipl.-Ing. M.Sc., Research Assistant, Solar-Institut Jülich (SIJ), Aachen University of Applied Sciences, Germany*
[e]*Prof. Dr.-Ing., Head of Solar-Institut Jülich (SIJ), Aachen University of Applied Sciences, Germany*
[f]*Dipl.-Ing. (TH), Technical Manager, Air Purification Systems, KBA-CleanAir, Stuttgart, Germany*
[g]*Dipl.-Ing., Head of Solar Development, Kraftanlagen Muenchen GmbH, Germany*

Abstract

This paper describes the modeling of a high-temperature storage system for an existing solar tower power plant with open volumetric receiver technology, which uses air as heat transfer medium (HTF). The storage system model has been developed in the simulation environment Matlab/Simulink®. The storage type under investigation is a packed bed thermal energy storage system which has the characteristics of a regenerator. Thermal energy can be stored and discharged as required via the HTF air. The air mass flow distribution is controlled by valves, and the mass flow by two blowers. The thermal storage operation strategy has a direct and significant impact on the energetic and economic efficiency of the solar tower power plants.

Selection and peer review by the scientific conference committee of SolarPACES 2013 under responsibility of PSE AG.

Keywords: thermal storage; regenerator; solar central receiver; solar tower power plant; dynamic thermal energy storage

* Corresponding author. Tel.: +49 (0)241 6009 53516; fax: +49 (0)241 6009 53570.
E-mail address: kronhardt@sij.fh-aachen.de

Selection and peer review by the scientific conference committee of SolarPACES 2013 under responsibility of PSE AG.

1. Introduction

The Solar-Institut Jülich (SIJ) is running a project in which methods for optimizing thermal energy storage of the Solar Tower Jülich (STJ) are investigated [1]. Germany's first solar tower power plant for experimental and demonstration purposes was constructed in the town of Jülich in the state of North Rhine-Westphalia and was inaugurated in autumn 2009. A schematic of the plant is shown in Fig. 1. The STJ supplies the grid with a nominal power of 1.5 MW_e. The installation of the STJ was the essential step for demonstrating the solar power tower concept with open volumetric receiver technology, which uses ambient air as heat transfer fluid (HTF). A further development is realized in project SpOpt which aims to optimize the storage technology and the storage operation of the solar tower.

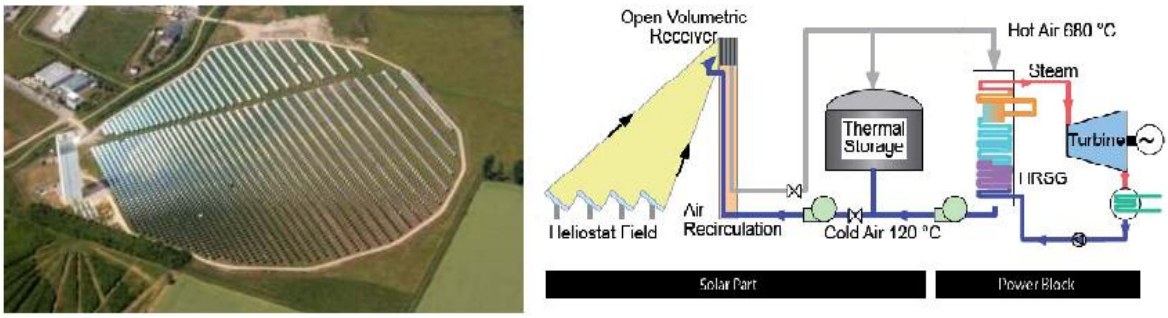

Fig. 1: (a) Jülich solar tower power plant, (b) power plant layout

The focus of the work regarding the optimization approaches lies on increasing the storage efficiency and improving the flexibility and operational effectiveness of the storage system. High flexibility is a desirable property of the storage. In this context high flexibility as a property implies that the storage can be charged and discharged at any arbitrary moment in time.

The models of the concepts are implemented in an existing Matlab/Simulink® tool which simulates the STJ. On the right side of Fig. 2 the component library for the steam cycle is shown. It consists of the following elements: boilers (stationary and dynamic), pumps, steam turbine, heat exchanger, condenser, heat exchanger, and generator, feed water tank (stationary and dynamic) and fasteners (e.g. distributors).

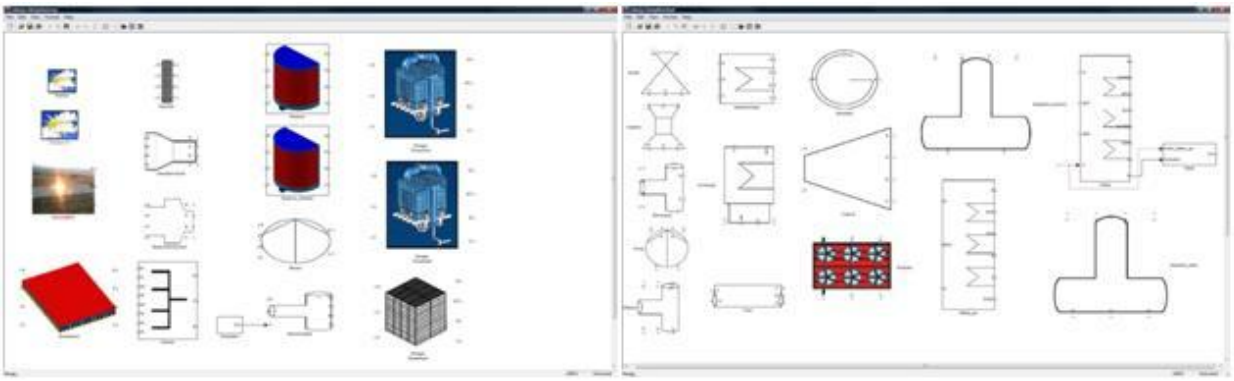

Fig. 2: (a) Component library of the solar cycle (b) The steam cycle in MATLAB/Simulink

For the simulation of the storage model as well as of the complete solar tower power plant with open volumetric receiver a component library was developed. The left side of Fig. 2 represents the component library of the solar cycle. It consists of the following components: storage (2 balance models, 1 discretized model), solar receiver components, blowers, heliostat field, weather data, mixer and T-part-branching.

For charging the storage, hot air from the receiver is passed through the storage system from upward to downward direction, whereby air as a HTF transfers the heat to the storage material. Upon discharging the air mass flow is reversed, whereby cold air enters the storage at the bottom and gets heated up to a high temperature. The hot air is then exiting the storage at the top. This method of charging and discharging the storage results in a thermal gradient being formed over the height of the storage as shown in Fig. 3:

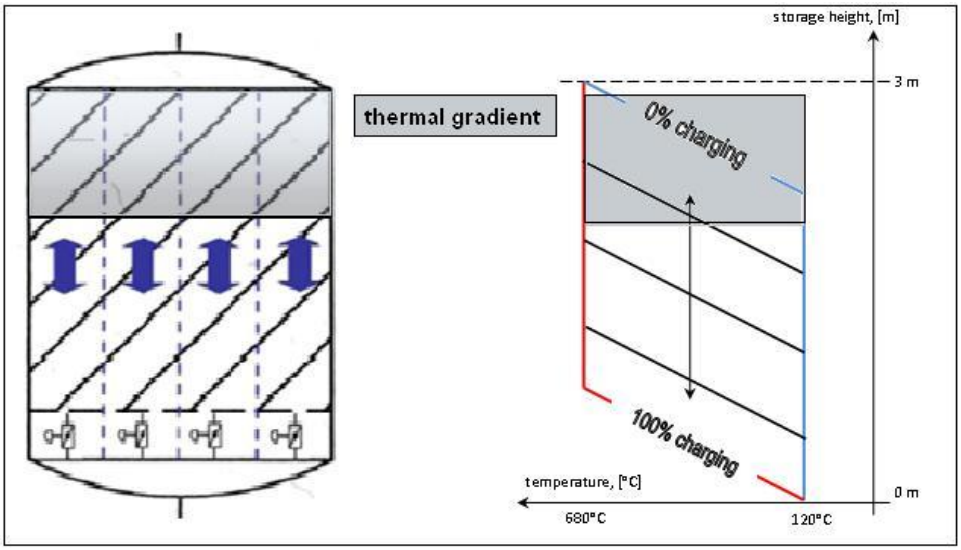

Fig. 3: Scheme of the thermal storage

Nomenclature

SIJ	Solar-Institut Jülich
STJ	Solar Tower Power Plant Jülich
RTO	Regenerative Thermal Oxidizer
HTF	Heat Transfer Fluid

2. Storage Design and Basics

Thermal energy storages are often mentioned in the context of the use of renewable energy and rational use of energy. The largest source of energy - the sun - has some special features that make her use difficult: seasonal and diurnal variation of radiation because of the movement of the earth around the sun and fluctuating irradiance by virtue of the weather conditions. To realize a stable and secure energy supply with solar power plant energy storages must be used. Therefore, in the solar thermal electricity generation is the economical thermal energy storage a core component to increase the efficiency of the plant. The energy storages charge the excess energy at maximum solar radiation and may transmit these at lower radiation or at high energy requirements. The energy storages differ in their use. The task of the thermal energy storage is to provide always the required heat energy at fluctuating

availability of solar energy and to balance the different power trends of energy supply. In essence the energy storages can be divided into two categories:

- Short-time-storage
- Long-term-storage

The short-time-storage may span several hours or days. The long-term-storage may compensate special seasonal heat differences and thus have much larger volume. Moreover, the storage can be categorized into different temperature ranges:

- Low-temperature-storage of temperatures of 100 °C
- Medium-temperature-storage for temperatures between 100 °C and 500 °C
- High-temperature-storage for temperatures above 500 °C

In addition, there are various types of heat storage:

- Storage of sensible heat due to temperature change
- Storage of latent heat by the change of physical state
- Storage of thermo-chemical heat as binding energy in reactions

As sensible heat is called the heat absorption or release, which is connected to a perceptible change in temperature. As the latent heat is called the thermal energy, which is absorbed or released during a phase transition. It is called latent because the absorption or release of heat leads to no significant change in temperature. Furthermore, there are still active and passive storage systems. In an active system, the storage medium is circulating through the system, in a passive system, the heat transfer medium flows through the heat storage medium.

A thermal storage system from the Jülich solar tower consists of several components, including: a storage tank with insulation, which is divided into four chambers. Each chamber is filled with honeycomb blocks of ceramic material, called heat storage medium, which absorbs the heat in the storage. The individual chambers are lined with high temperature insulation. The storage is a non-pressurized container, so that no special operation control of the storage is necessary. In each storage chamber are several thermal sensors for temperature measurement within the ceramic structure positioned [2]. The measurements are used to control the energy content of the storage. As the heat storage medium, the substance that carries the heat into storage and delivers to the storage medium, air is used in the STJ.

The company KBA CleanAir was responsible for the design, manufacture, installation and commissioning of the designed storage in STJ. Among the physical properties, schedule and financial aspects the dynamic high-temperature storage was commissioned in solar tower power plant in Jülich in 2009.

The STJ storage has in principle the behavior of a regenerator. At high solar radiation, a part of the heat energy can be stored and then removed again demand-oriented. The control of the airflow path is achieved by the shut-off damper and the power control of two blowers. To load the storage with the thermal energy obtained from the receiver hot air of about 680 °C (hot side) is introduced into the storage chambers, and flows cooled down (cold side). As the air cools, the ceramic storage material heats up. When unloading, the flow direction is reversed. Storing and removal of heat are effected according to the required quantity of energy and temperature levels of the individual storage chambers, which may be quite different. The modular design of the STJ storage system allows flexible loading and unloading. The operation of the storage can be adapted to different needs and requirements specifications, so that the technology can show a very wide range of applications. The most important basis of this technology is to allow the continuous cyclical process in heat dissipation.

3. Simulation of STJ Storage

The thermal storage model describes the temporal and spatial behavior of the storage medium which is simulated in discretized form. In each layer, the momentary energy balance and the loss mechanisms are determined using appropriate differential equations. The developed model of the storage system will be integrated into a large model which simulates the entire solar power plant. However the analysis of the system is mainly focusing on the storage system. Results of the simulated process strategies are very valuable and shall be implemented in the operation of the STJ storage.

Following Khartchenko [3] the two-phase model of packed bed storage is reduced to a one-phase model with N layers due to the high heat transfer. The model discretizes the storage in a large number of interacting layers and thus provides detailed information about the temperature distribution within the storage. The honeycomb bricks are traversed by an air flow to transport the heat into the storage-bed or from the storage back. The volume specific heat transfer coefficient between air and solid is sufficiently large, so that the temperature difference between air and solid is small during heat addition and heat dissipation. The thermal conductivity of the ceramic material, in contrast, is low and therefore the heat losses are at a standstill in the absence of the air mass flow over short periods negligibly small, so that each layer i at time t is given by a uniform temperature of the storage medium. Accordingly, the current energy balance is calculated for each layer. The temperature dependent properties of air and of the storage medium and the heat loss to the environment have been considered in this model. However, in the simulation no pressure losses by forced convection and no free convection inside the storage are calculated at standstill.

To achieve the temperature gradient the designed operating parameters are used, this process is called thermocline-zone [4]. The best storage potential would be theoretical in a thermocline-zone, which runs parallel to the temperature axis, see Fig. 3.

The storage model is implemented in Matlab with the block "S-Function" with the appropriate syntax. With the Simulink block it is possible to adjust custom systems to the requirements. The S-function block divides the signals into an input vector, a state vector and an output vector, see Fig. 4.

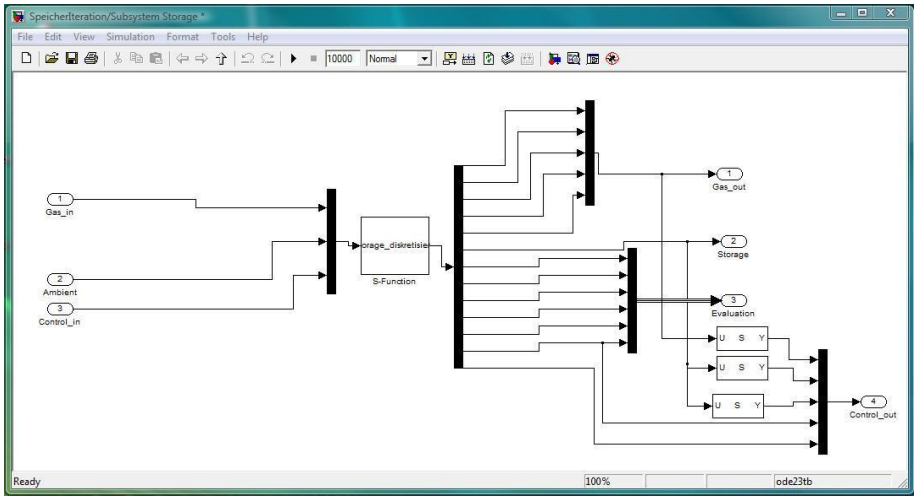

Fig. 4: S-Function of storage system

In S-function blocks continuous-time and discrete-time state variables can be calculated separately from each other, this routine can be used with a different predetermined sequence. The storage model simulates the entire operating cycle of storage, comprising:

- charging the storage by heating
- Storing without heating
- Unloading the storage by heat extraction

The following assumptions were made for the simulation model:

- N-layers of storing
- Neglecting the specific heat capacity of the air to that of the storage medium
- Air temperature at the exit in the i-th layer is equal to the temperature of the storage medium in the respective layer
- Low Biot number[2] (Bi < 0.1): the temperature difference is small between the fluid stream and the solid
- No heat conduction between the layers
- No consideration of pressure losses

Input variables for the model are the inlet mass flow and the gas temperature to the storage device. The current energy balance of a layer can be solved using the following equation:

$$(1-\varepsilon)\cdot\rho_{solid}\cdot c_{p,solid}\cdot V_{i,solid}\cdot\frac{\partial T_{i,solid}}{\partial t}=\dot{m}_{fluid}\cdot c_{p,fluid}\cdot(T_{solid,i-1}-T_{solid,i})-\dot{Q}_{loss,i} \quad (1)$$

The developed model considers conventional heat losses of the i-th layer to the environment. Since the specific heat capacity of air is negligible compared to that of the solid that results when loading the energy balance for a layer of storage:

$$\dot{Q}_{solid,i}=\dot{V}_{fluid}\cdot\rho_{fluid}\cdot c_{p,fluid}\cdot(T_{fluid,in}-T_{fluid,out})=\alpha_v\cdot V_{solid}\cdot(T_{fluid,in}-T_{solid}) \quad (2)$$

The enthalpies are calculated from material data with the help of an implemented gas function which is temperature dependent. The model represents a simplified system of n equations with n unknown temperatures of the solid substance. For initialization a certain temperature distribution is assumed in the interior storage. The specific heat capacity of ceramic stones is experienced temperature-dependent and is calculated using an empirical formula.

To validate the storage model, some loading and unloading operations were simulated. The simulation results are compared with the measurement data from the power plant operation. For the validation of the operating day was chosen 26/04/2011, as some storage tests have been performed on this day. The following figures show the relevant input parameters of the storage model, including: inlet air temperature. The inlet mass flow is varying between 50 % and 75 % of the nominal mass flow. From the weather data for the location Jülich ambient temperature was determined, see Fig. 5, Fig. 6.

[2] The Biot number is the ratio of the external heat transfer, so the heat transfer from the surface to the surrounding medium, the inner heat transfer, so the conduction of heat through the body.

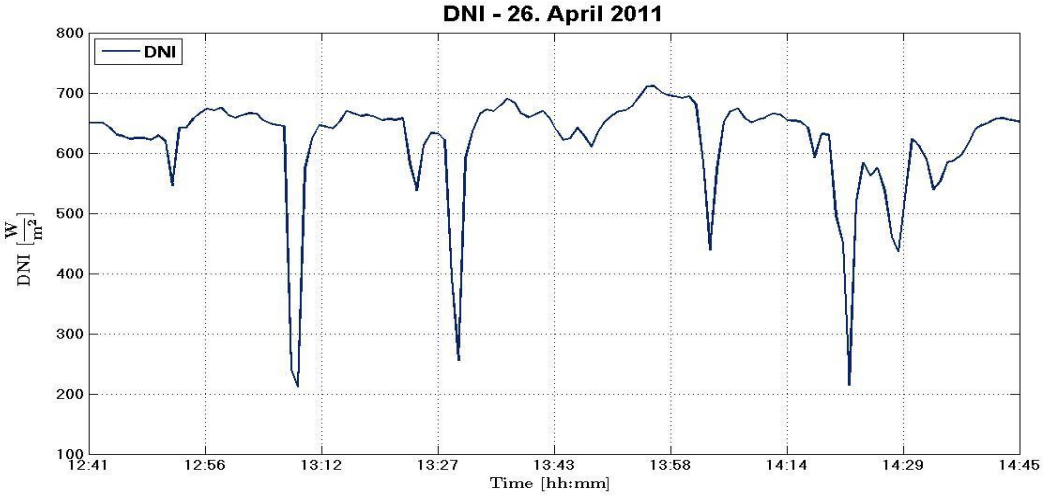

Fig. 5: DNI – Value on 2011-04-26

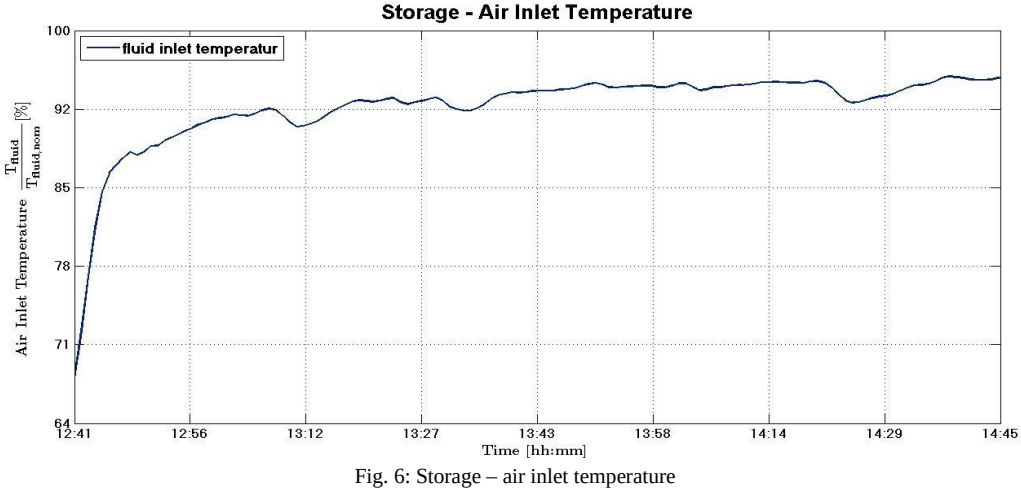

Fig. 6: Storage – air inlet temperature

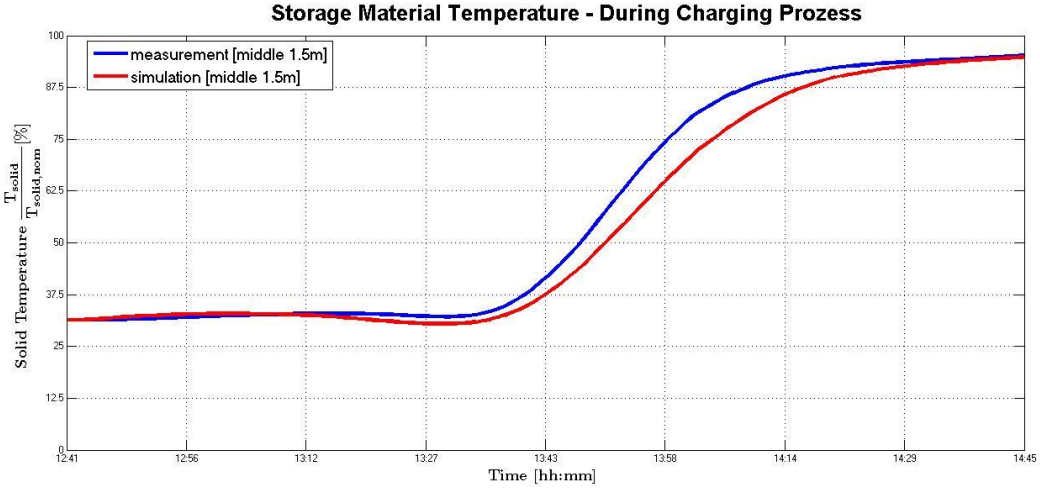

Fig. 7: Charging – solid temperature – middle

The results of the simulation of a loading process are shown in the following figures. The figure Fig. 7 shows the temperature development in the middle layer of the storage. Overall, the results show that the model gives the temperature distribution of the storage with a great accuracy. The small deviations are due to simplifications of the system. In the context of model validation several loading and unloading operations of the storage have been examined. In this case, the temperature distribution in various levels was compared, the simulation calculations showed very good results.

4. Conclusions

With the storage model implemented into the overall Jülich power tower model total annual yield calculations can be carried out. Furthermore, hybridized power tower systems with open-volumetric air receiver technology can be simulated. The simulation model has been optimized such that charging and discharging modes can be simulated for the implemented control strategies. In a further step annual energy yield simulations shall be carried out for scaled-up power tower systems of the Jülich type for different locations within the Earth's Sun Belt regions.

Acknowledgements

This work is supported by the German Federal Ministry of Education and Research within the framework of the program "FHprofUnt – Research at Universities of Applied Sciences and Companies". This financial support is gratefully acknowledged.

References

[1] Dr.-Ing. Zunft, S., Dipl.-Ing. (FH) Hänel, M., Dipl.Ing. Dreißigacker, V., Dipl.-Ing. Göhring, F., Dipl.-Ing. Wahl, E., & Krüger, M. (2011). "Jülich Solar Power Tower - Experimental Evaluation of the Storage Subsystem and Performance Calculation". ASME Journal of Solar Energy Engineering, Vol. 133, pp. 031019.1-031019.5

[2] Gall, J, Abel, D., Ahlbrink, N., Andersson, J., Diehl, M., Boura, C., Schmitz, M., et al. (2010). Simulation and Control of Solar Thermal Power Plants. *International Conference on Renewable Energies and Power Quality*. Granada: European Association for the Development of Renewable Energies, Environment and Power Quality (EA4EPQ).

[3] Khartchenko, N., 1995, "Thermische Solaranlagen. Grundlagen, Planung und Auslegung", Springer Verlag