The transition of Climate Models into Earth System Models

Patrick Jöckel,
German Aerospace Center (DLR), Oberpfaffenhofen

IEEE International Conference on High Performance Computing
19. December, 2011, Bengaluru, India

Deutsches Zentrum
für Luft- und Raumfahrt e.V.
in der Helmholtz-Gemeinschaft

Outline

- Introduction
- “Coupling”: An attempt to classify different methods
- Examples, challenges (and solutions)
    1. Atmospheric Chemistry in the Earth System
    2. Atmosphere – Ocean System
    3. On-line nesting: an alternative way to higher resolution
- Summary and Outlook

Computational Earth System Science
(numerical weather prediction and climate simulations)
was from the beginning on exploiting HPC up to the limits …

1950 (Charney, Fjørtoft, von Neumann): first numerical weather forecast on ENIAC (Electronic Numerical Integrator and Computer)

forecast time: 24 hours
computation: 24 hours

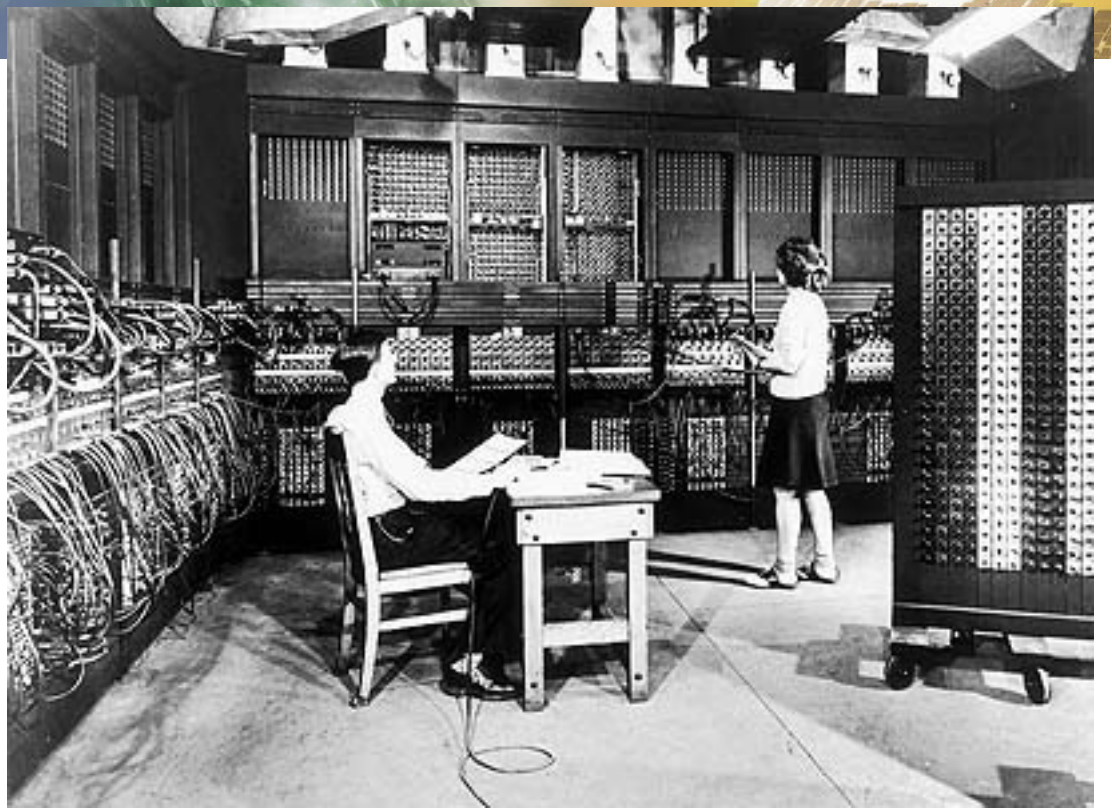

1950 (Charney, Fjørtoft, von Neumann): first numerical weather forecast on ENIAC (Electronic Numerical Integrator and Computer)

forecast time: 24 hours
computation: 24 hours

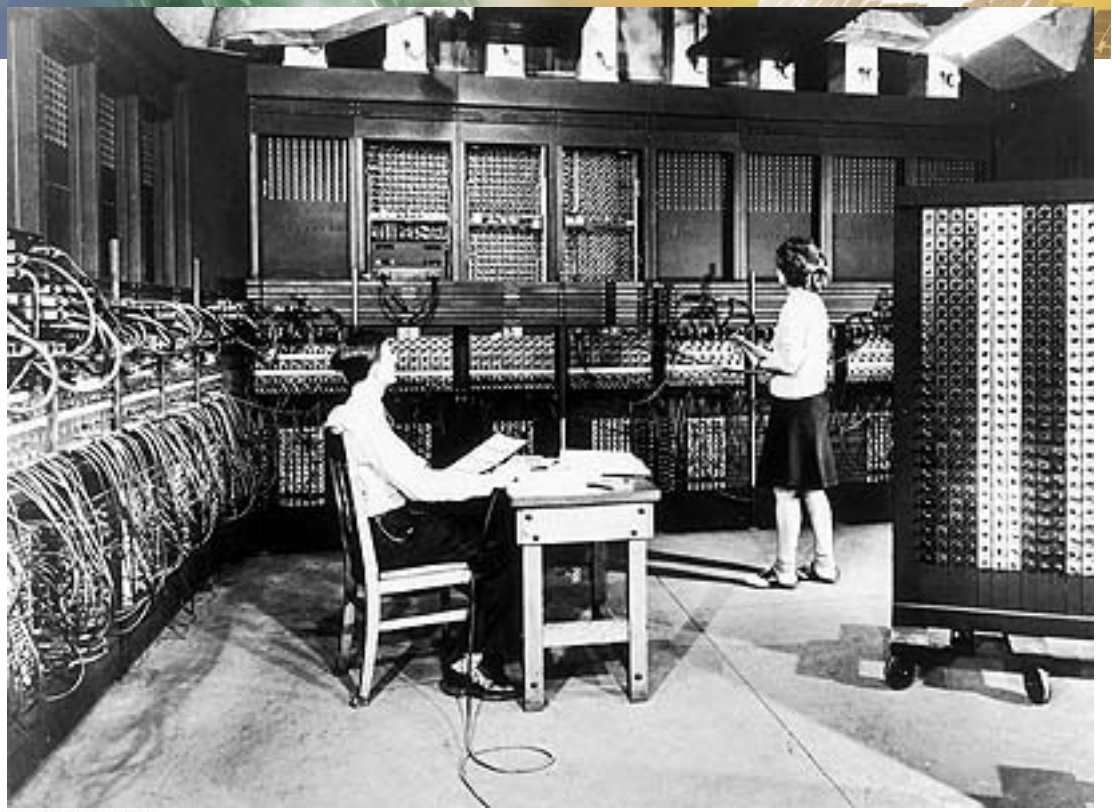

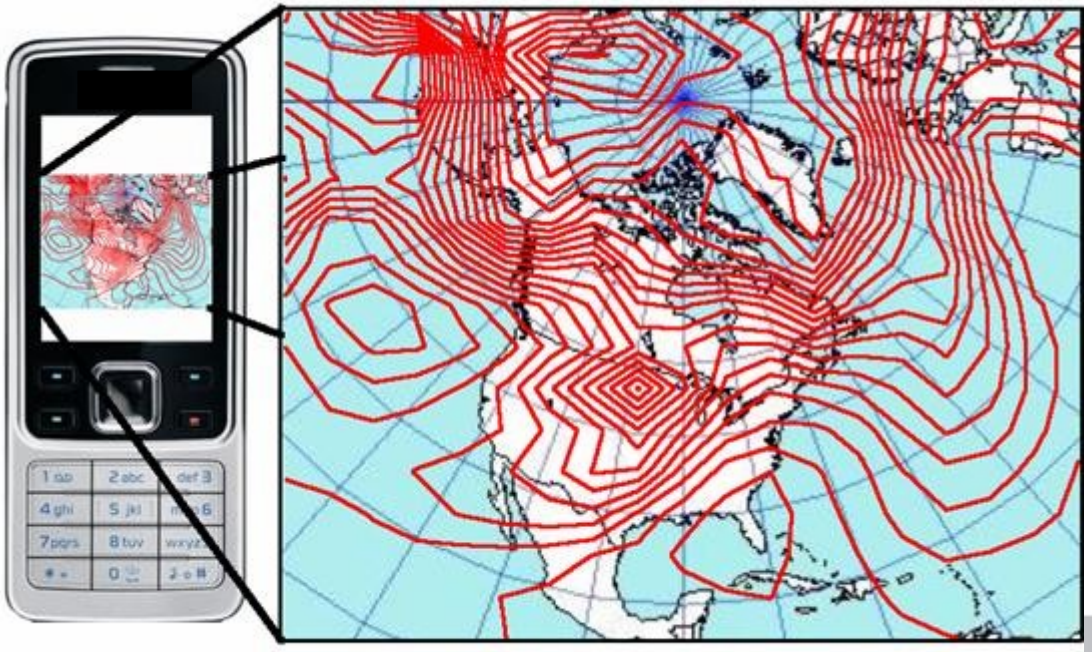

2008 (Lynch & Lynch): reconstruction on mobile-phone (JAVA-application):

forecast time: 24 hours
computation: < 1 second (!!!)

Lynch & Lynch, Weather 63, 324-326, 2008.
http://mathsci.ucd.ie/~plynch/eniac/phoniac.html

Deutsches Klimarechenzentrum (DKRZ)

June 2009:
no. 27 of top500

8448 Cores
158 TFlops/s

http://www.dkrz.de

Computational Earth System Science
(numerical weather prediction and climate simulations)
was from the beginning on exploiting HPC up to the limits …

… mainly for two reasons:

- increasing resolution of numerical discretisation(s)
  (i.e., finer “grids”)

- increasing complexity by incorporating more and more
  processes

Computational Earth System Science
(numerical weather prediction and climate simulations)
was from the beginning on exploiting HPC to the limits …

… mainly for two reasons:

- increasing resolution of numerical discretisation(s)
  (i.e., finer “grids”)

- increasing complexity by incorporating more and more
  processes

→ *“coupling”*

The development of climate models, past, present and future

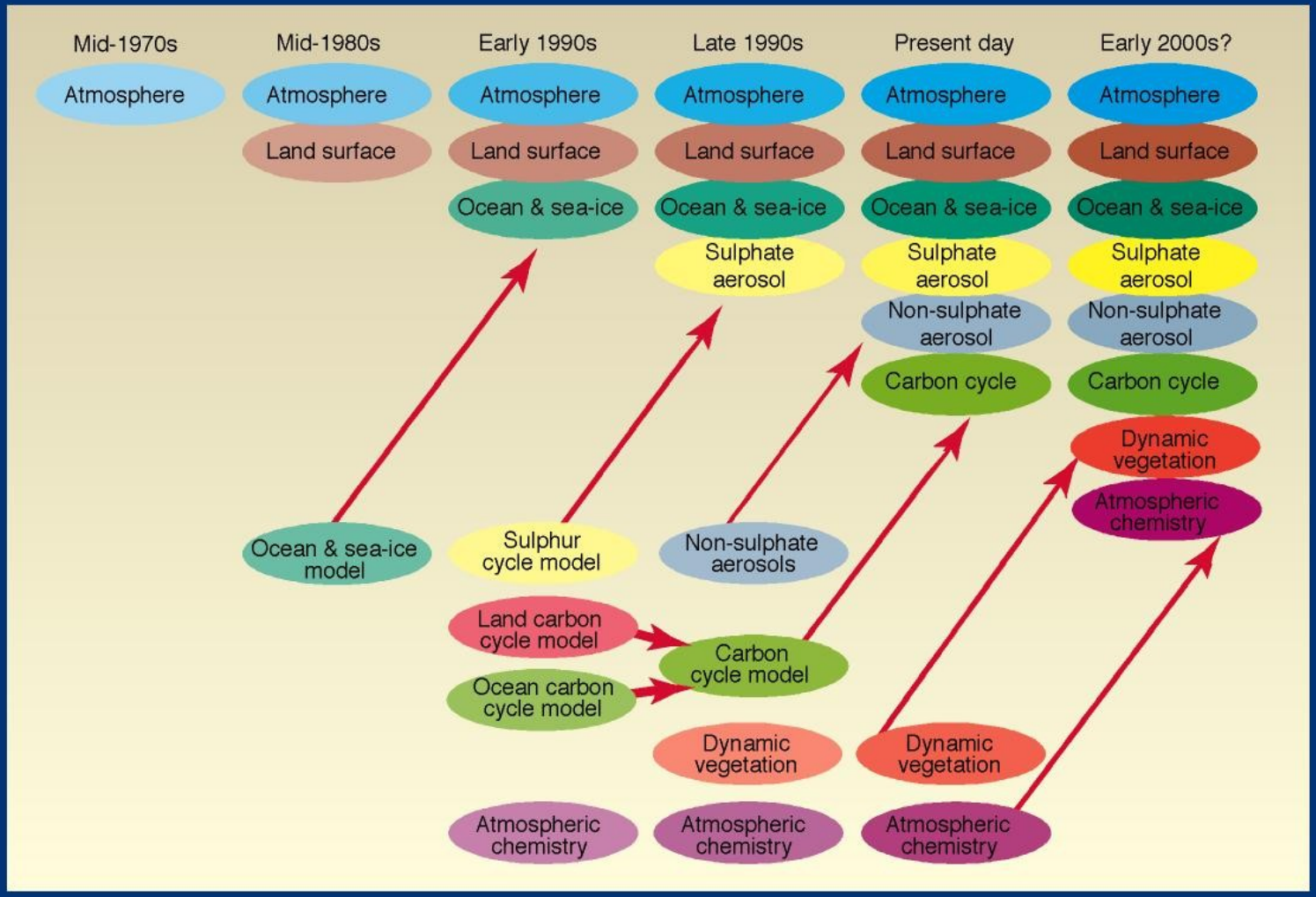

WG1 - TS BOX 3
FIGURE 1

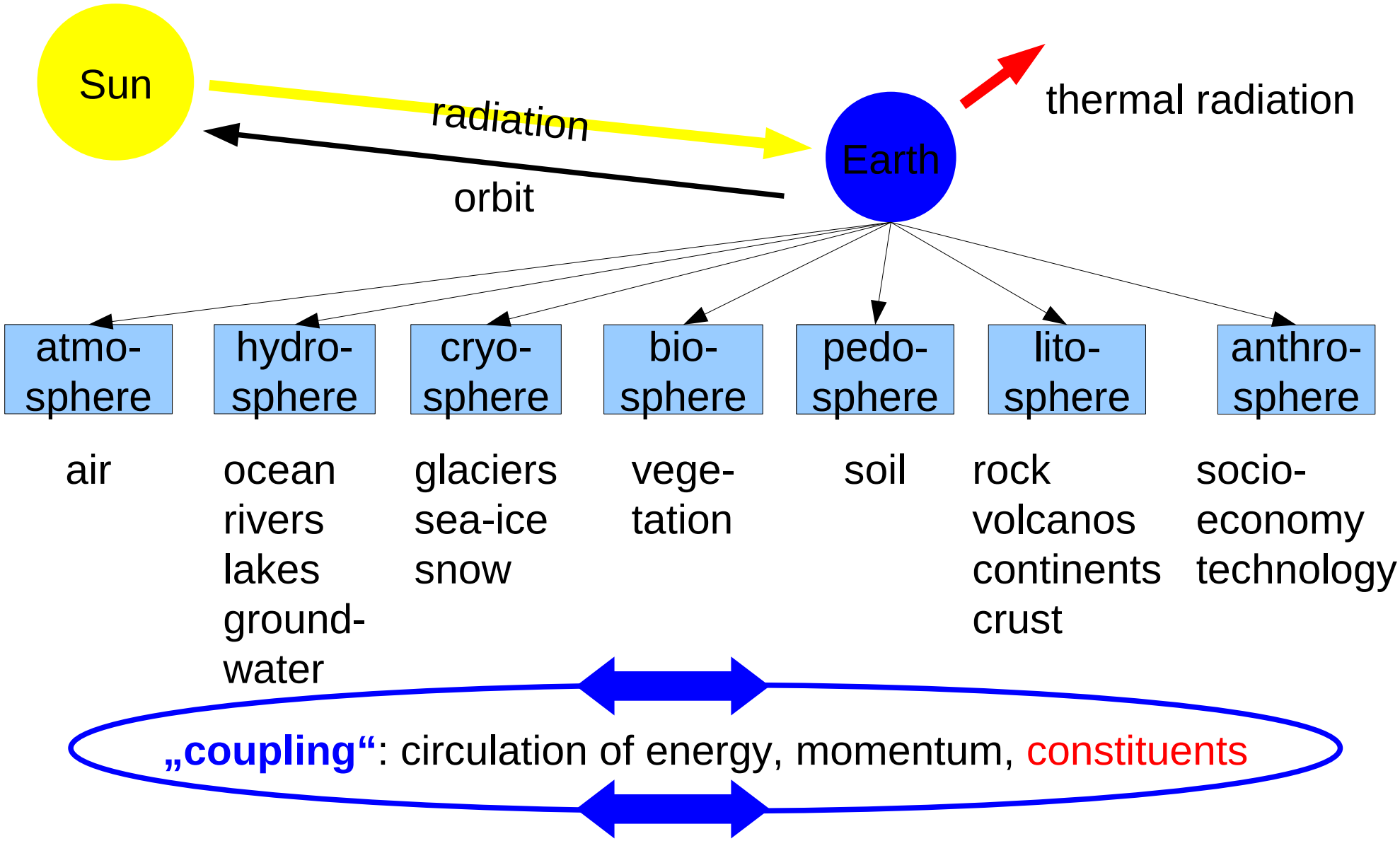

change of „state variables“ by physical, chemical, biological, socio-economic processes

Coupling ...

… the prerequisite is the *operator splitting* concept

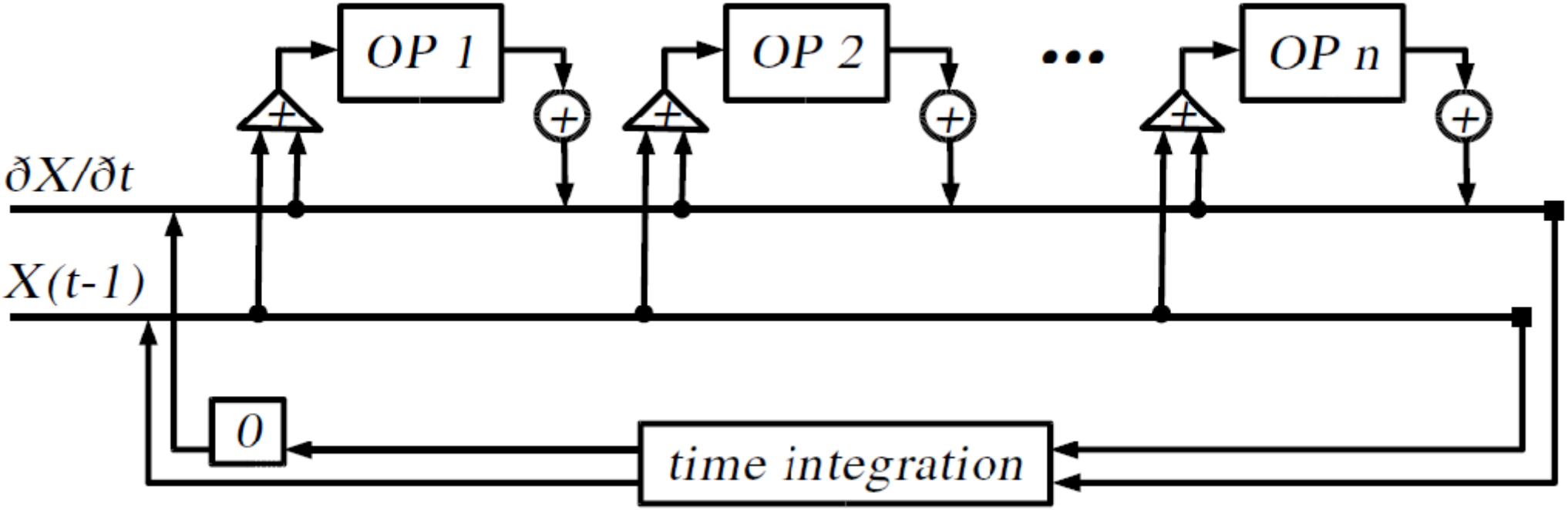

(Jöckel et al., ACP, 2005)

Coupling ...

… the prerequisite is the *operator splitting* concept

Example:
X = air temperature

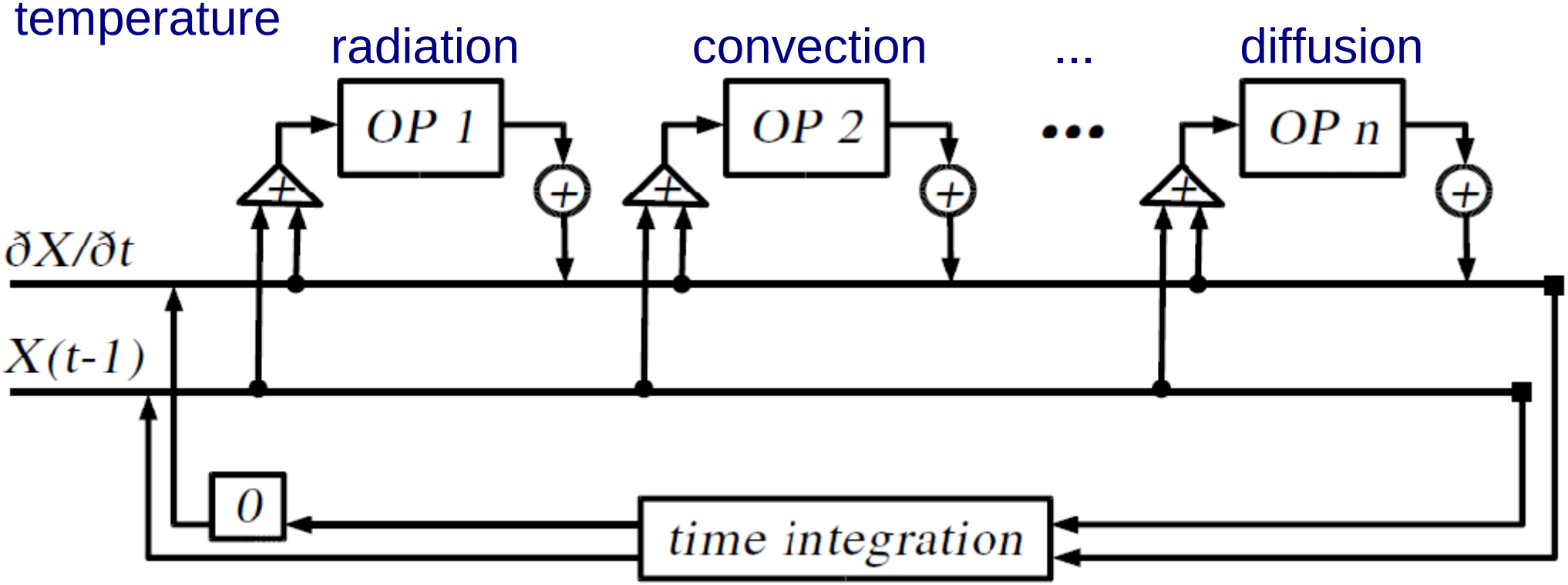

(Jöckel et al., ACP, 2005)

Coupling ...

… the prerequisite is the *operator splitting* concept

different numerical algorithms (discretisation, parallel decomposition, cache/vector blocking, ...)

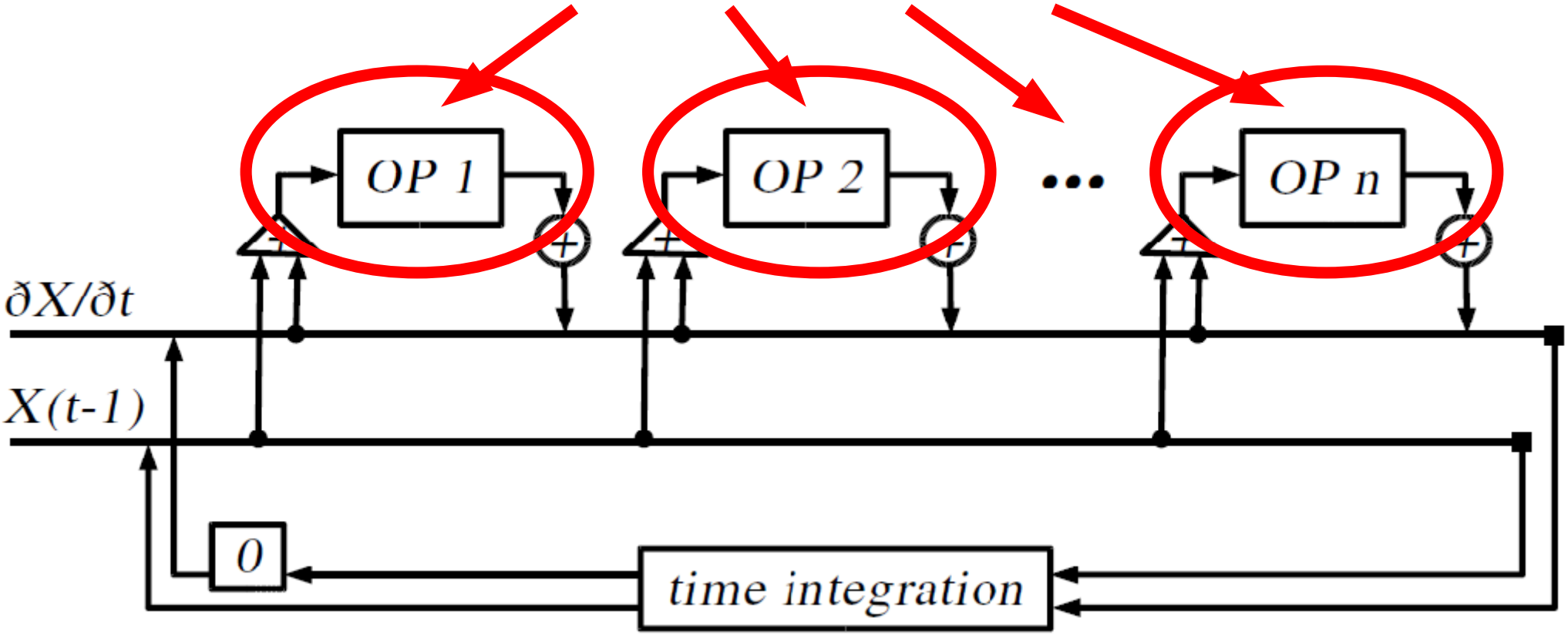

(Jöckel et al., ACP, 2005)

Coupling ...

Example:

basic (dynamical) equations → coupled PDE system

reaction kinetics (chemistry) → coupled ODE system

spectral transform

Rosenbrock-3 (auto)

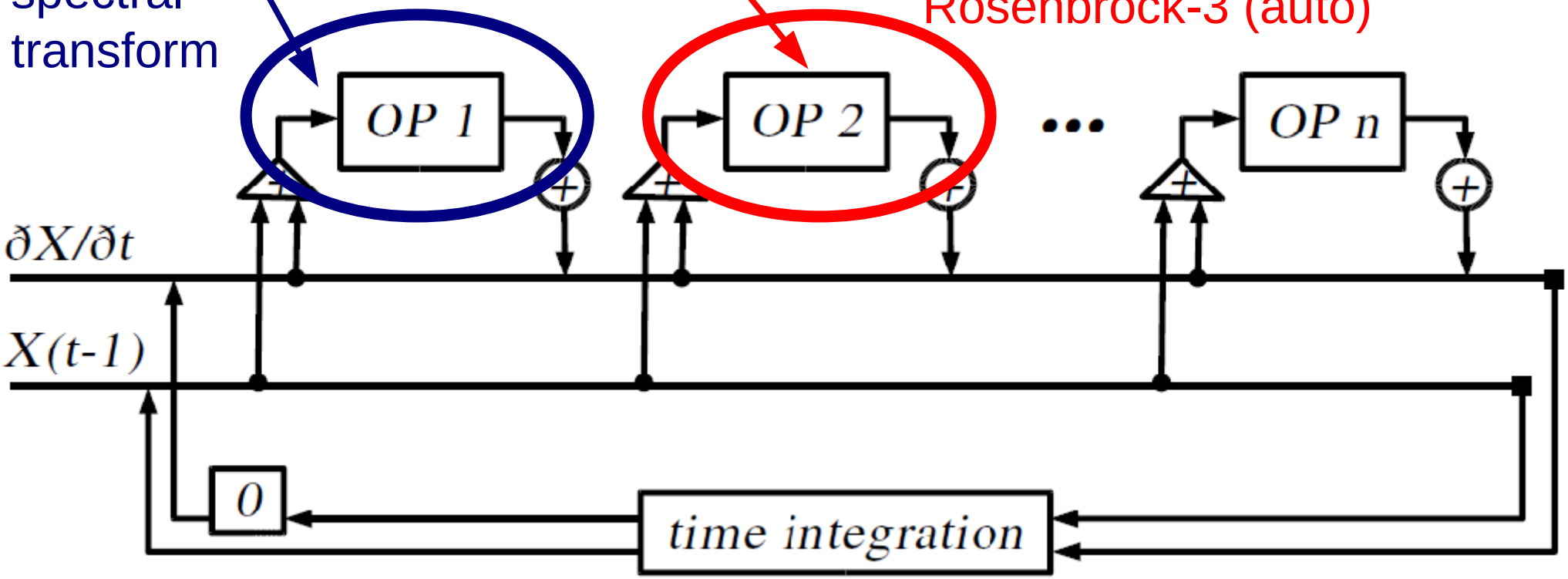

(Jöckel et al., ACP, 2005)

Coupling … a classification

(of the “way” how operators “communicate”)

internal coupling ⟷ **external coupling**

- Os are part of the *same program unit* (“task”)
- data exchange via *working memory*

{ on-line / direct }

- Os are split into *different program units* (“tasks”)

off-line

- data exchange via *external storage* (files)

on-line

- data exchange via *working memory*

indirect

- involves an *add. external* program (“*coupler*”)

direct

Coupling … a classification

(of the “way” how operators “communicate”)

internal coupling ⟷ **external coupling**

- Os are part of the *same program unit* (“task”)
- data exchange via *working memory*

{ on-line / direct }

- Os are split into *different program units* (“tasks”)

off-line

- data exchange via *external storage* (files)

on-line

- data exchange via *working memory*

indirect

- involves an *add. external* program (“*coupler*”)

direct

choice depends on:
- application
- implementation effort (legacy code!)
- desired sustainability, flexibility, re-usability

→ compromise in minimizing computational and communication overheads

Example 1: internal coupling

Language level: CALL subroutine_1(..., A, …) [INTENT(OUT)]

CALL subroutine_2(..., A, …) [INTENT(IN)]

more formal: standard model infrastructure + coding standard

- Earth System Modeling Framework (ESMF)
  (*http://www.earthsystemmodeling.org*)
- Modular Earth Submodel System (MESSy)
  (*http://www.messy-interface.org*, *Jöckel et al., ACP, 2005*)
- … (many others)

key: strict separation of *model infrastructure (4 layer!)*
(memory management, I/O, parallel decomp., time control, etc.)
from *"process" (and "diagnostic") formulations*

Example 1a: internal coupling of Atmospheric Chemistry in MESSy

coupling via model infrastructure (nearly object oriented)

- TIMER
- CHANNEL (pointer based memory management and I/O)
- TRACER (special for chemical constituents)
- …

“operators” = “processes” = “submodels”

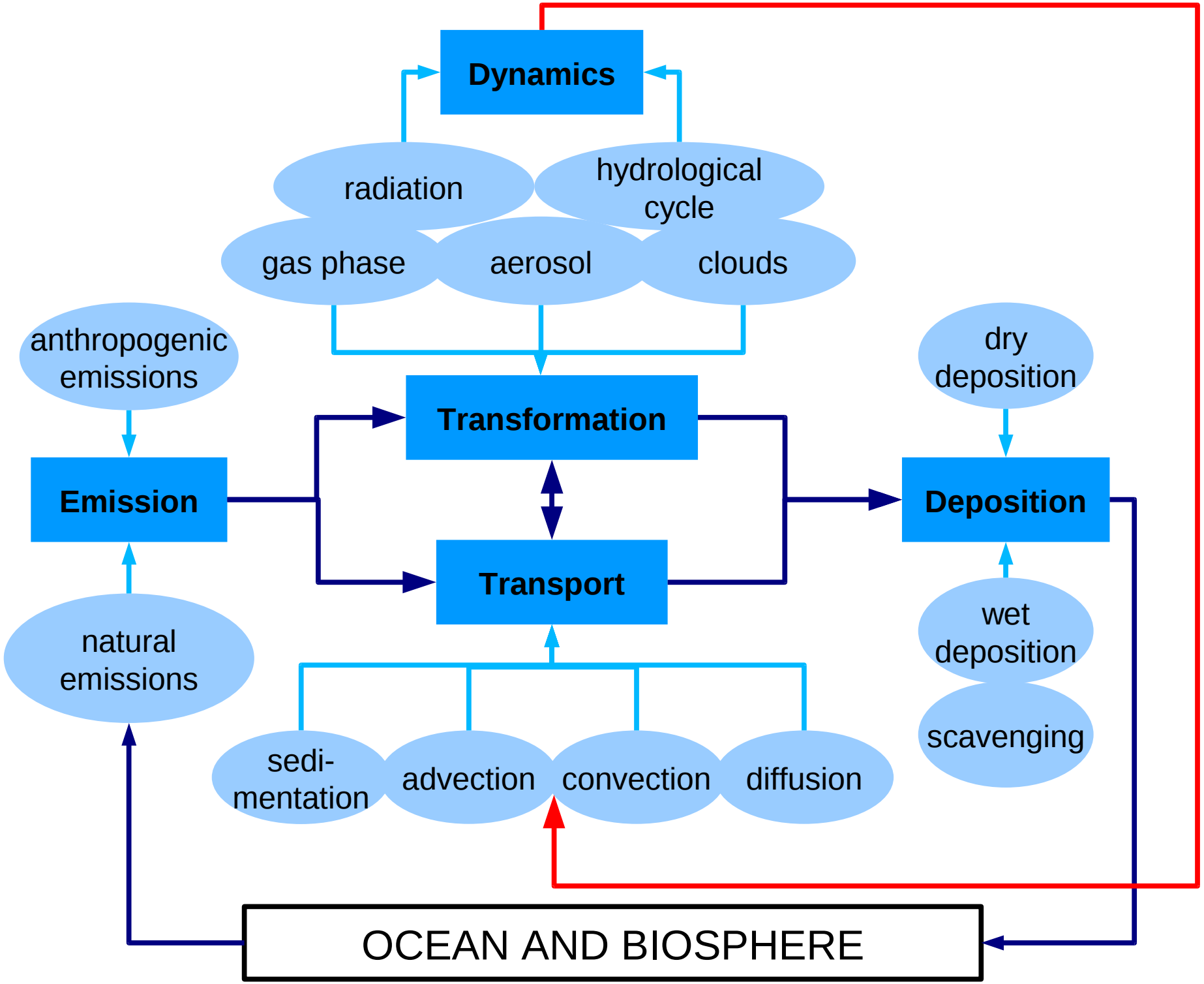
Dynamics
radiation
hydrological cycle
gas phase
aerosol
clouds
anthropogenic emissions
dry deposition
Transformation
Emission
Deposition
Transport
natural emissions
wet deposition
scavenging
sedi-mentation
advection
convection
diffusion
OCEAN AND BIOSPHERE

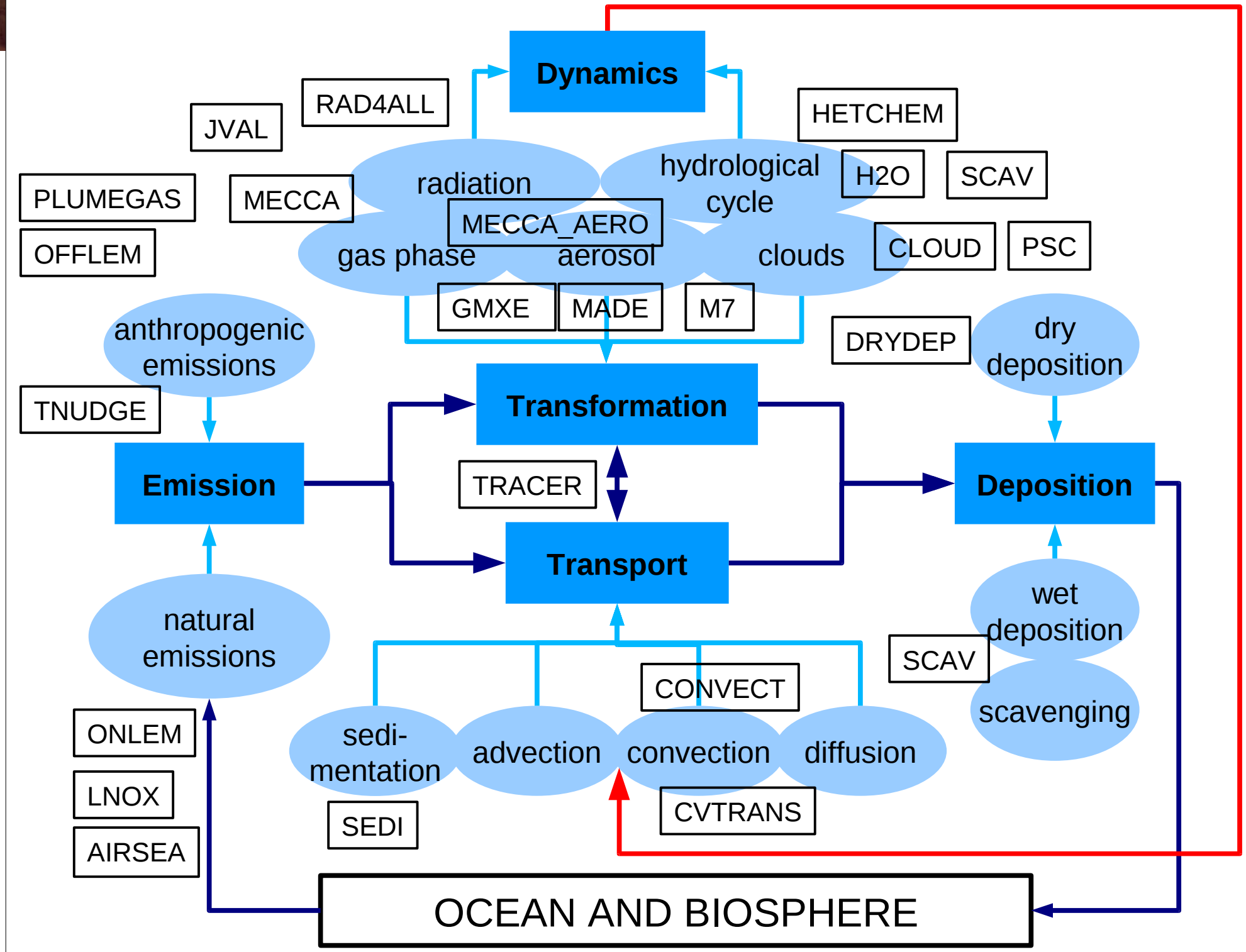
Dynamics
RAD4ALL
JVAL
HETCHEM
PLUMEGAS
MECCA
radiation
hydrological cycle
H2O
SCAV
MECCA_AERO
OFFLEM
gas phase
aerosol
clouds
CLOUD
PSC
GMXE
MADE
M7
anthropogenic emissions
DRYDEP
dry deposition
TNUDGE
Transformation
Emission
TRACER
Deposition
Transport
natural emissions
wet deposition
SCAV
scavenging
CONVECT
ONLEM
sedi-mentation
advection
convection
diffusion
LNOX
SEDI
CVTRANS
AIRSEA
OCEAN AND BIOSPHERE

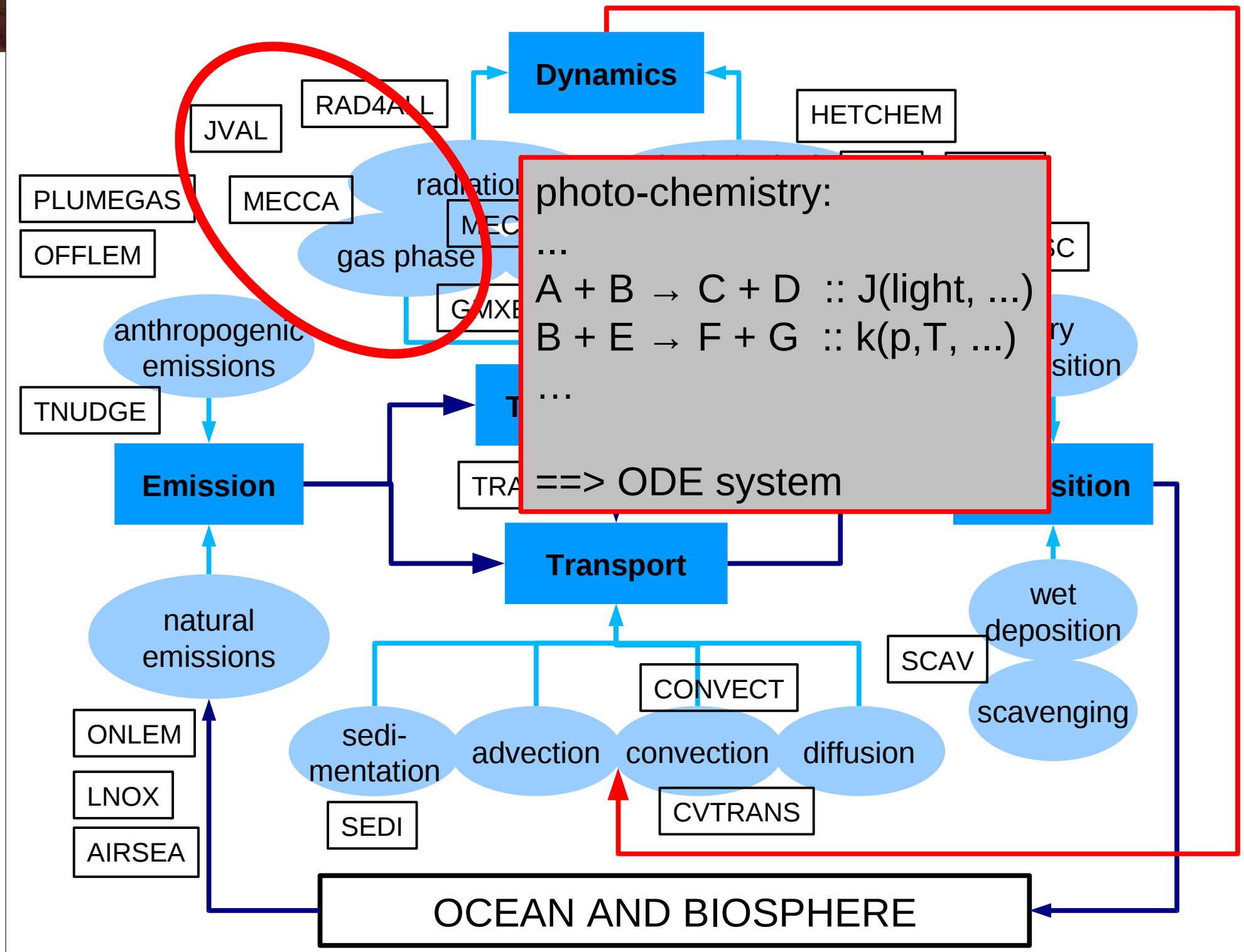
Dynamics
HETCHEM
JVAL
RAD4ALL
PLUMEGAS
MECCA
OFFLEM
gas phase
anthropogenic emissions
TNUDGE
Emission
natural emissions
ONLEM
LNOX
AIRSEA
Transport
sedi-mentation
SEDI
advection
convection
CONVECT
CVTRANS
diffusion
wet deposition
SCAV
scavenging
OCEAN AND BIOSPHERE
photo-chemistry:
...
A + B → C + D :: J(light, ...)
B + E → F + G :: k(p,T, ...)
...
==> ODE system

Number* of sub-time steps of the ODE solver for the kinetic system

T106L90MA → ~ 1.125° x 1.125° x 90 (~80 km) ; Δt = 6 min

*vertical average

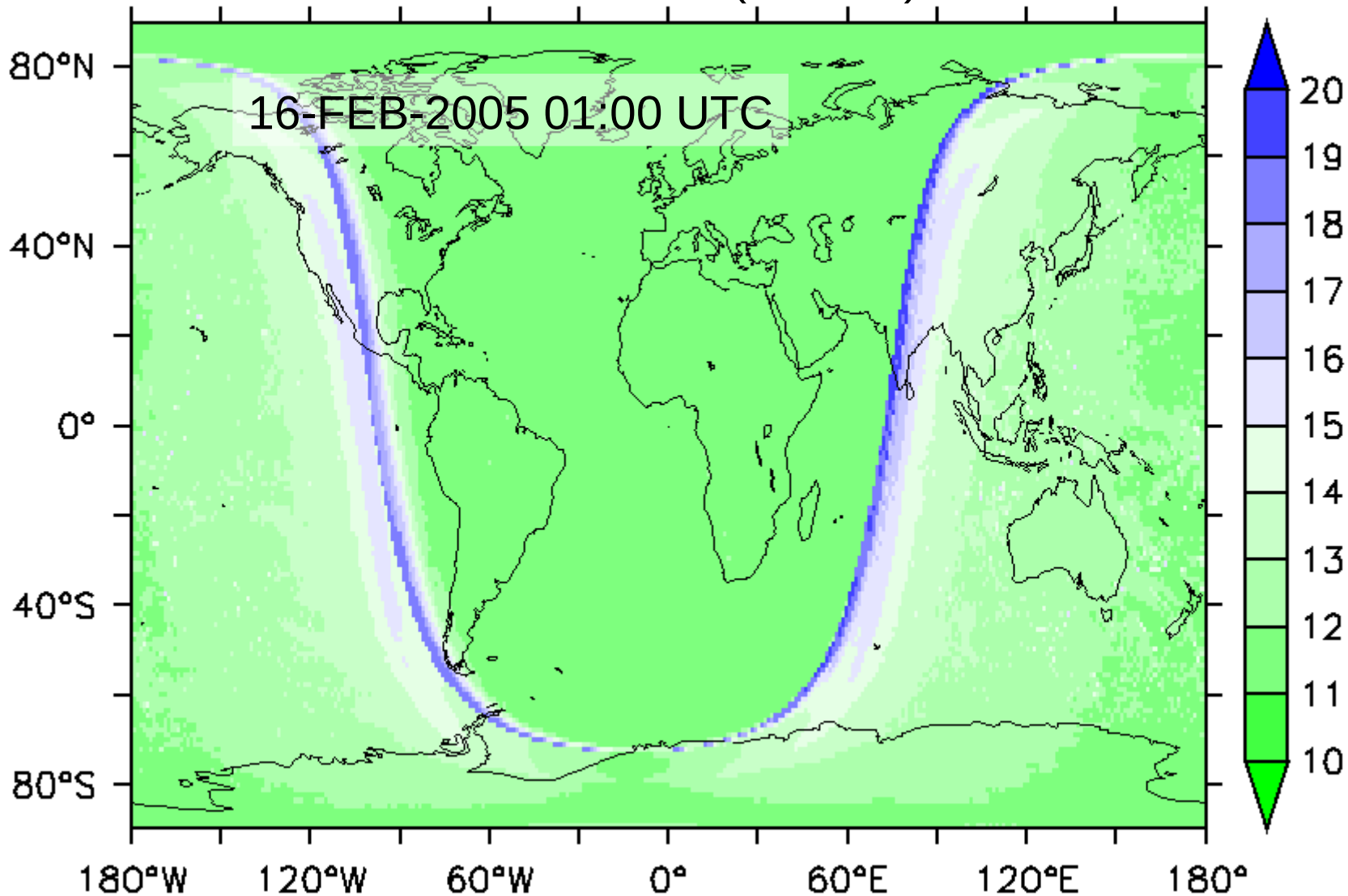

Number* of sub-time steps of the ODE solver for the kinetic system

T106L90MA → ~ 1.125° x 1.125° x 90 (~80 km) ; Δt = 6 min

*vertical average

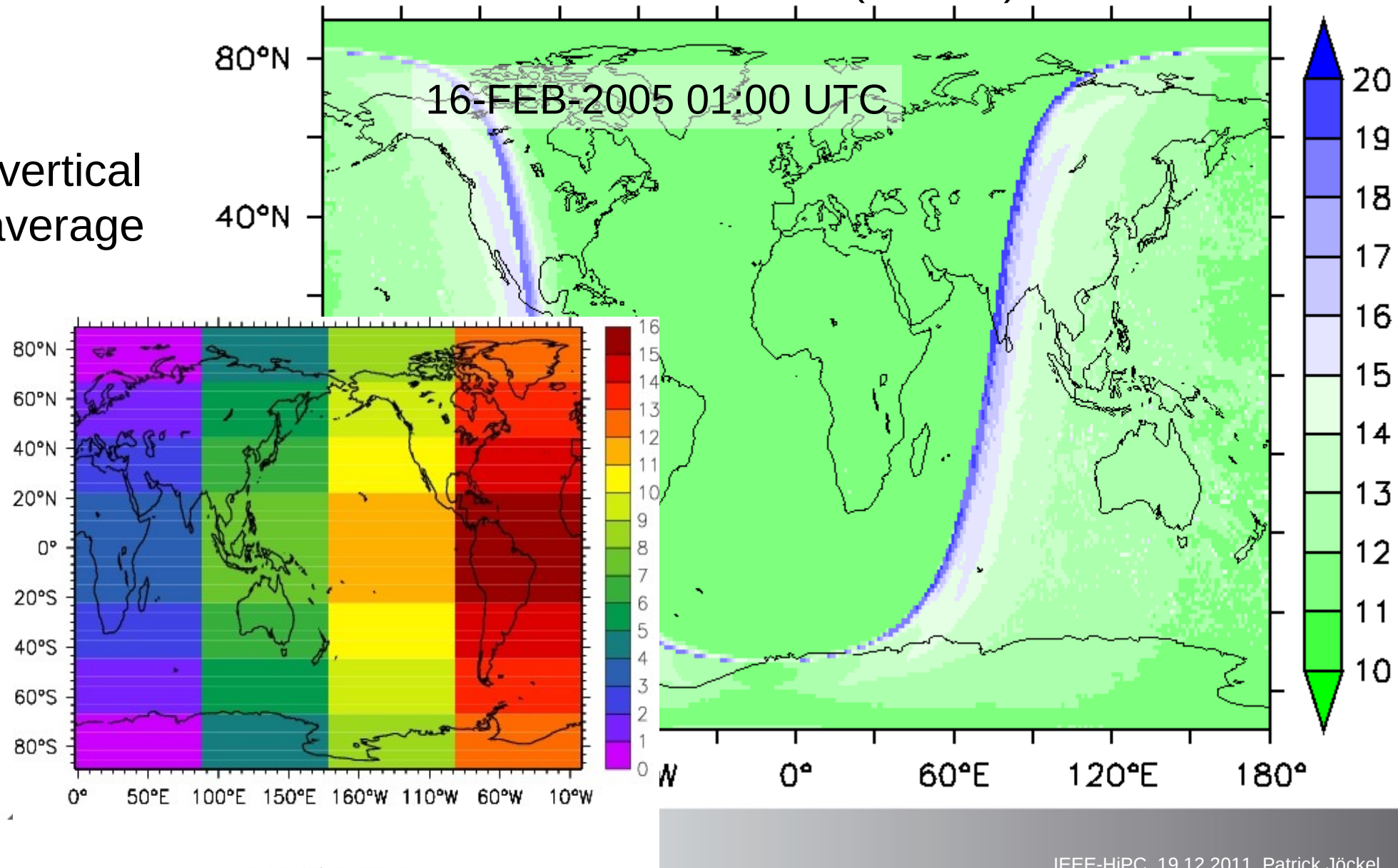

Number* of sub-time steps of the ODE solver for the kinetic system

T106L90MA → ~ 1.125° x 1.125° x 90 (~80 km) ; Δt = 6 min

*vertical average

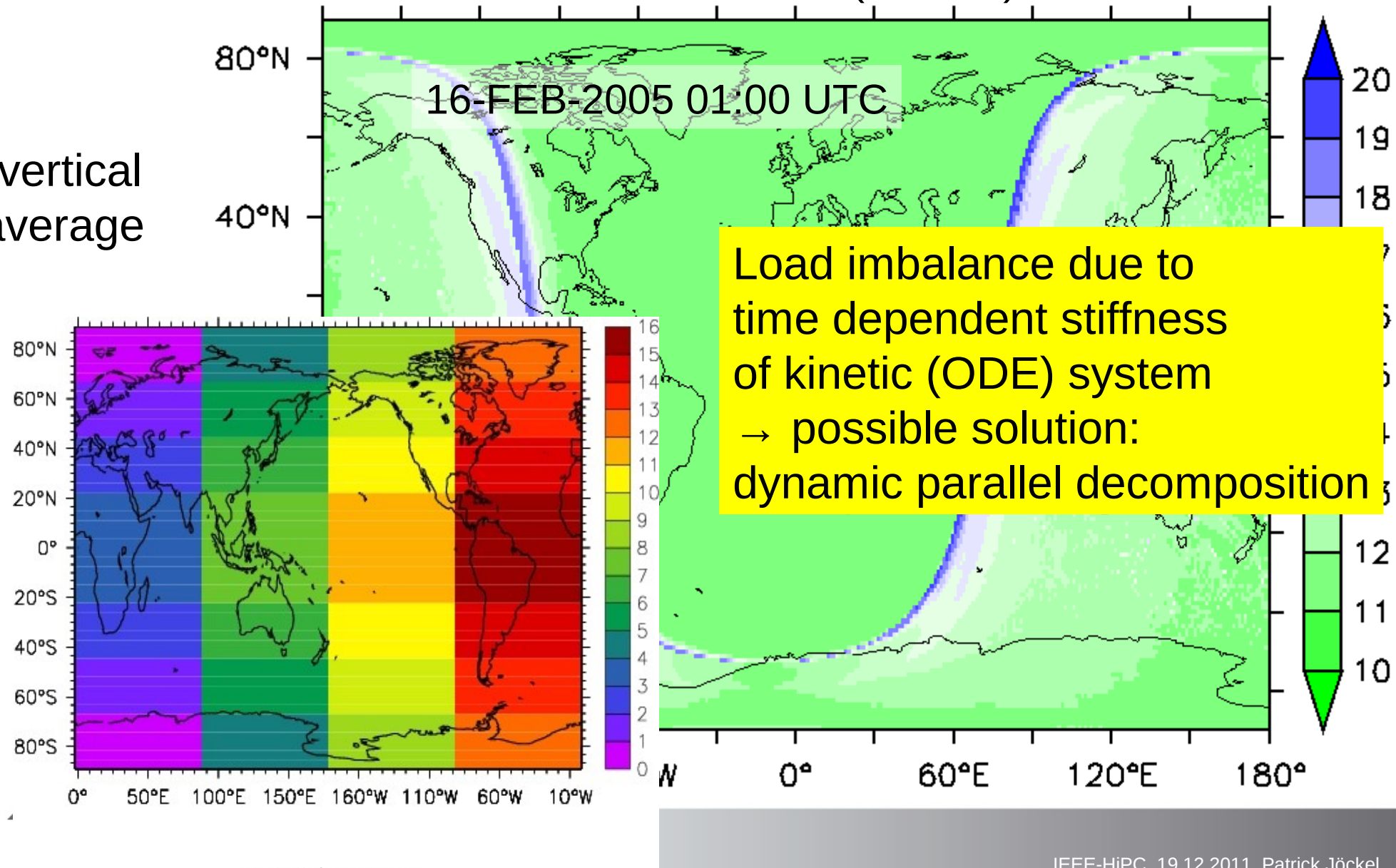

Load imbalance due to time dependent stiffness of kinetic (ODE) system → possible solution: dynamic parallel decomposition

Example 2: internal coupling **versus** indirect external coupling

of an Atmosphere – Ocean System (domain coupling)

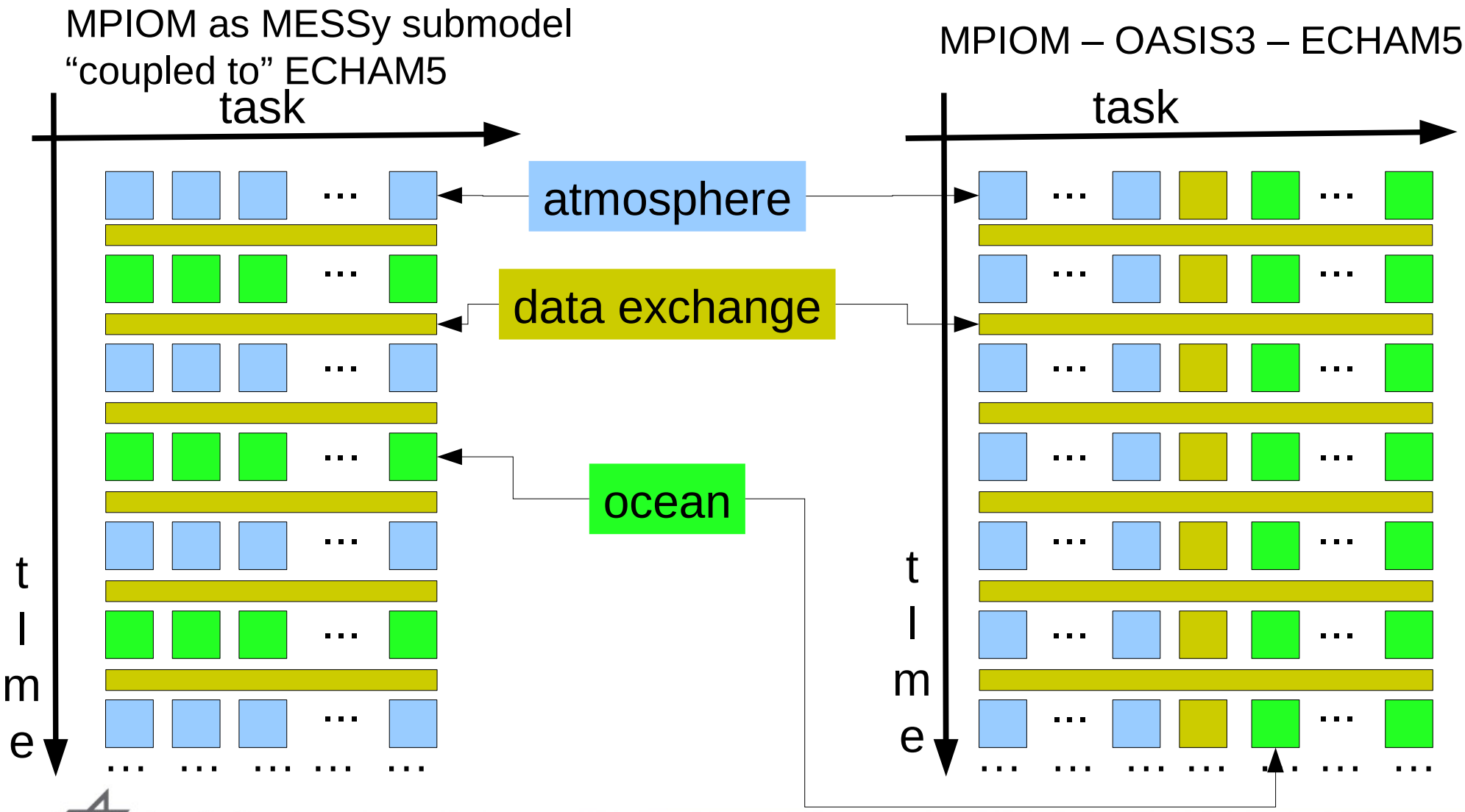

Example 2: internal coupling **versus** indirect external coupling

of an Atmosphere – Ocean System (domain coupling)

Processor ID # for 4 x 4 decomposition

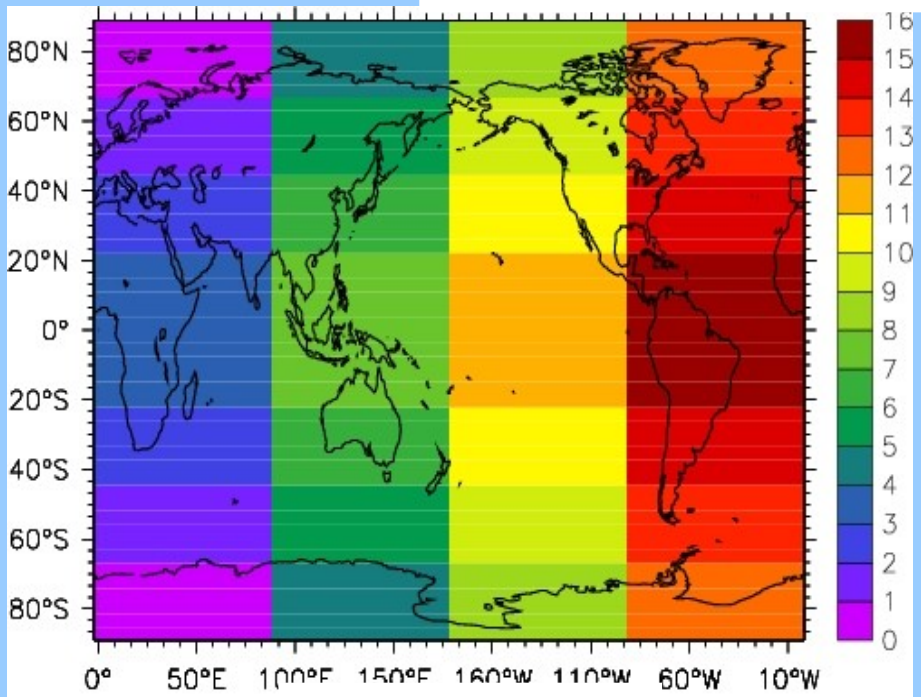

Atmosphere

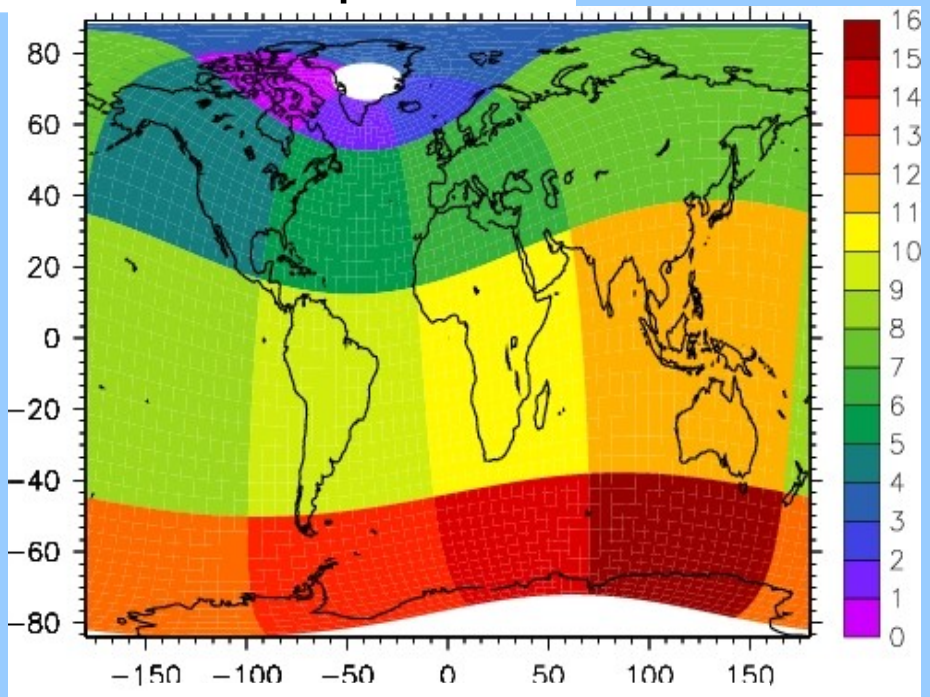

Ocean (rotated grid)

Example 2: internal coupling **versus** indirect external coupling

of an Atmosphere – Ocean System (domain coupling)

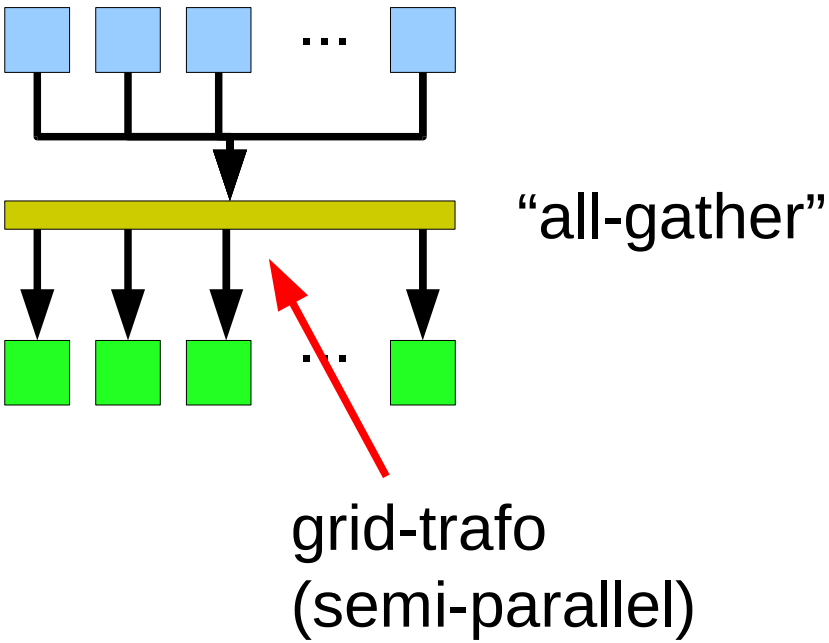

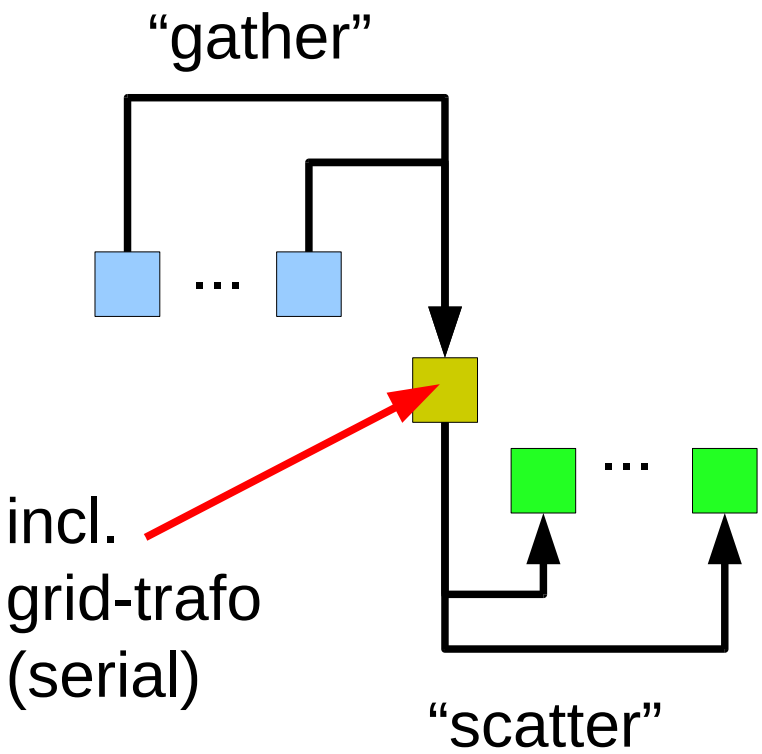

Example 2: Performance (seconds per simulated month)

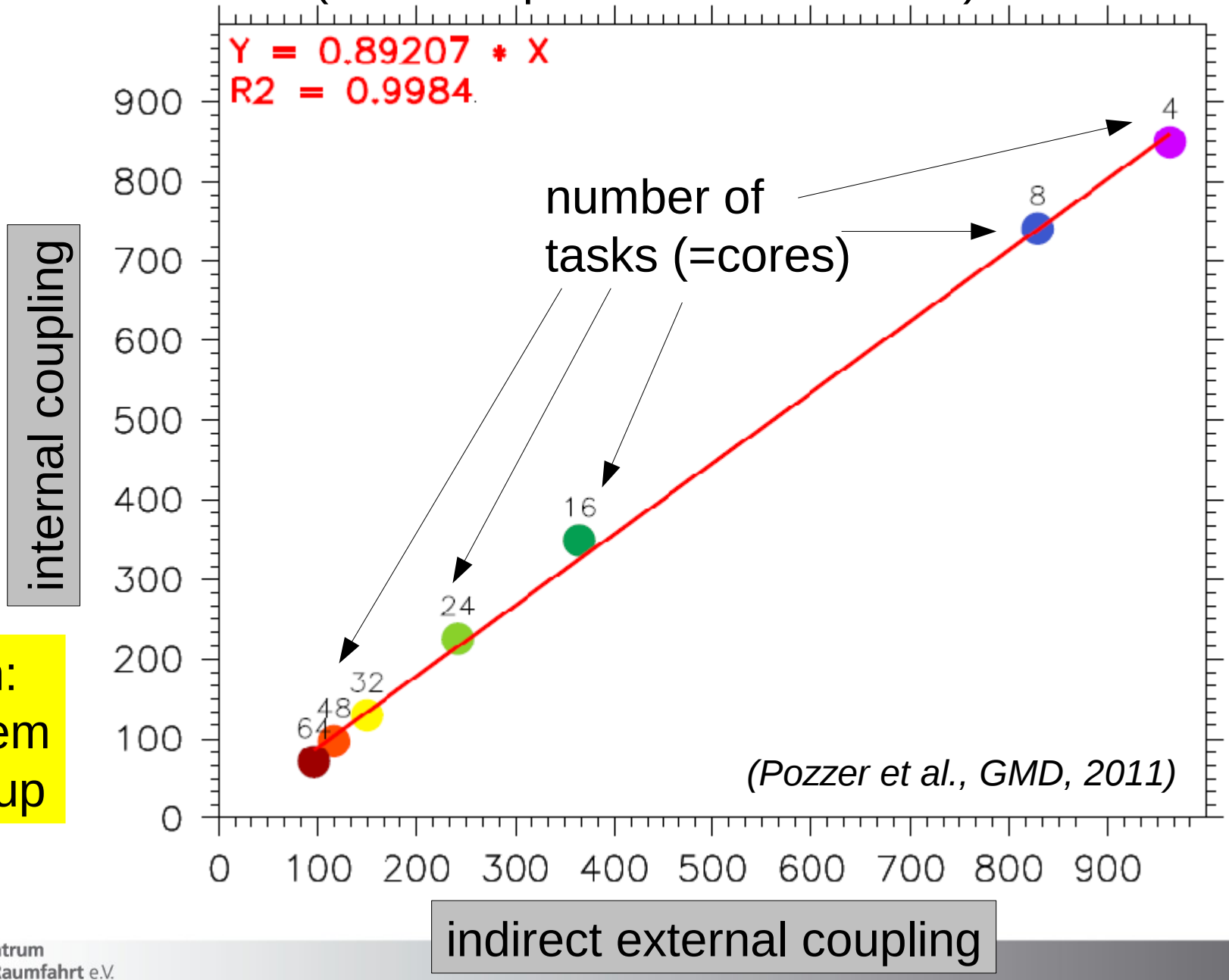

depends on:
- HPC system
- model setup

Example 3: On-line nesting: an alternative way to higher resolution

- 1-way on-line nested global-regional atmospheric model system (zoom)
- multiple instances possible due to client – server architecture of MMD ...

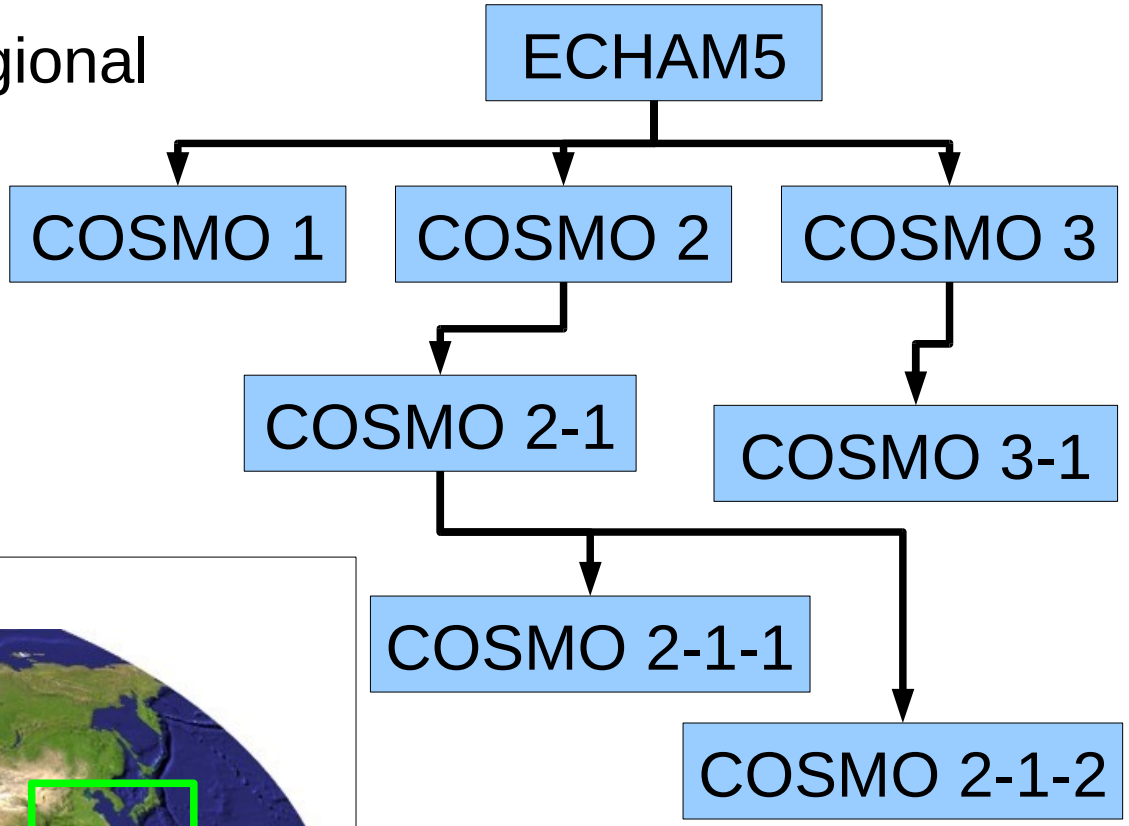

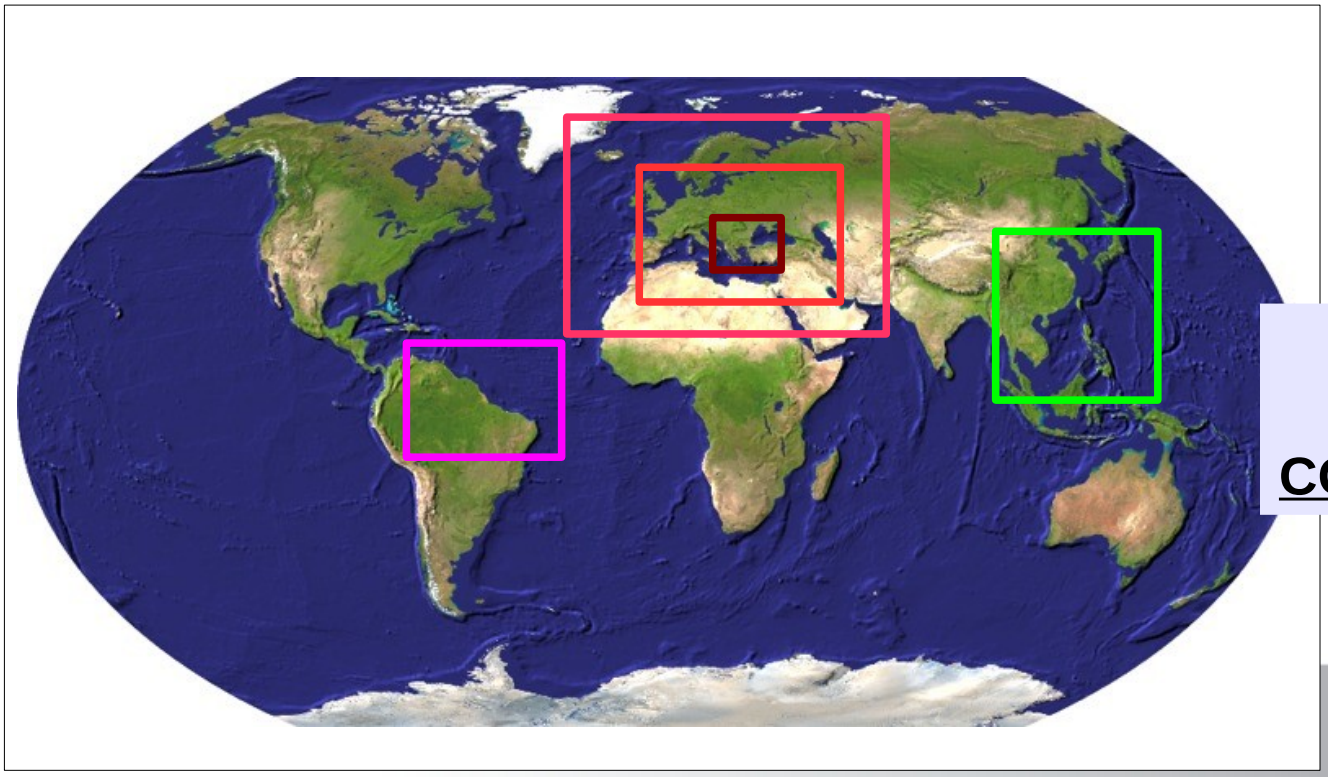

MECO(n):
MESSy-fied ECHAM and COSMO models n-times nested

(Kerkweg & Jöckel, GMDD, 2011a,b; Hofmann et al., GMDD, 2011)

MECO(2) simulation of **Eyjafjallajokull eruption plume 2010**

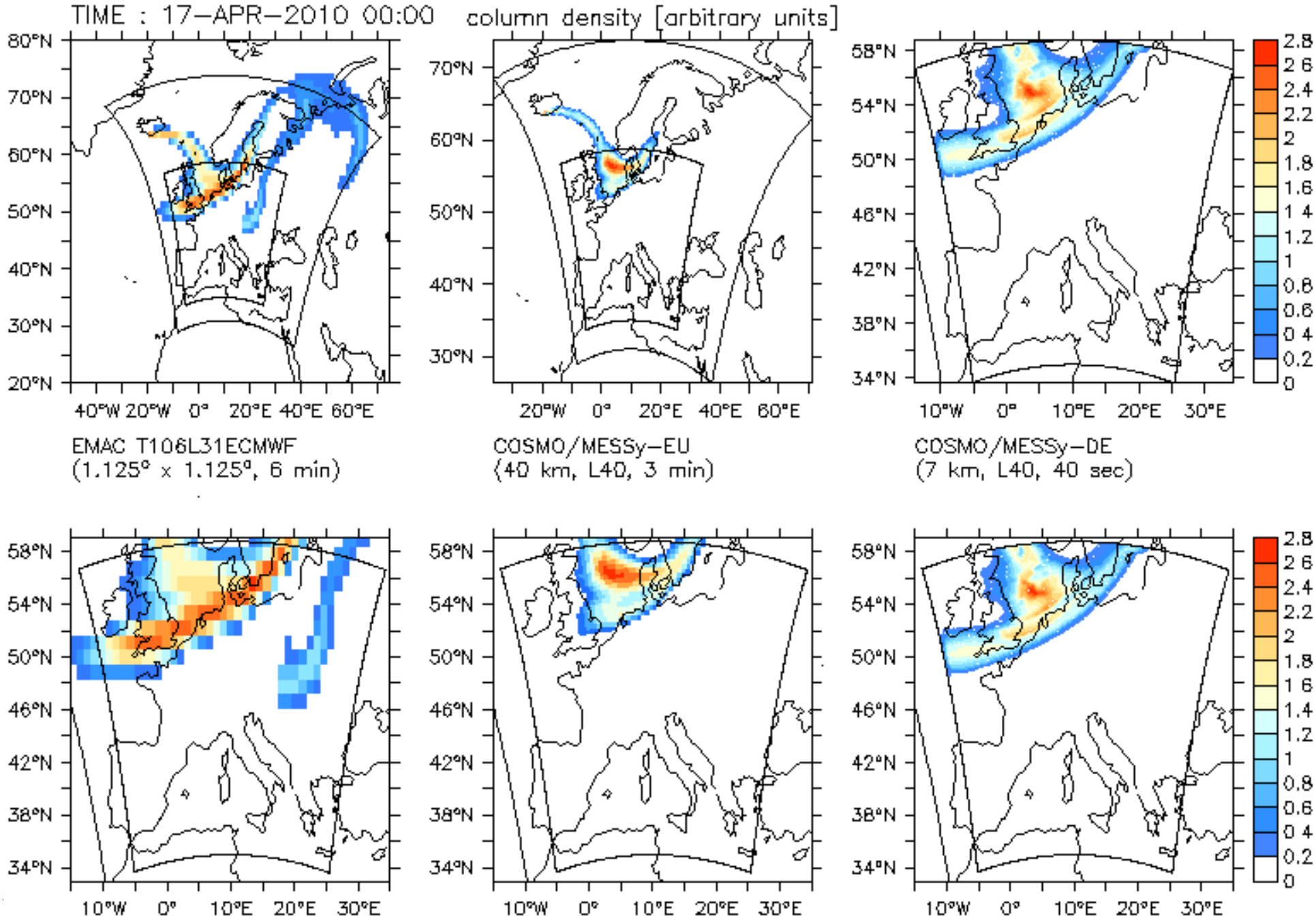

(c) Patrick Joeckel, DLR, Aug 2011

Example 3: On-line nesting: an alternative way to higher resolution

MMD-Server
(ECHAM5 or COSMO)

MMD-Client
(COSMO)

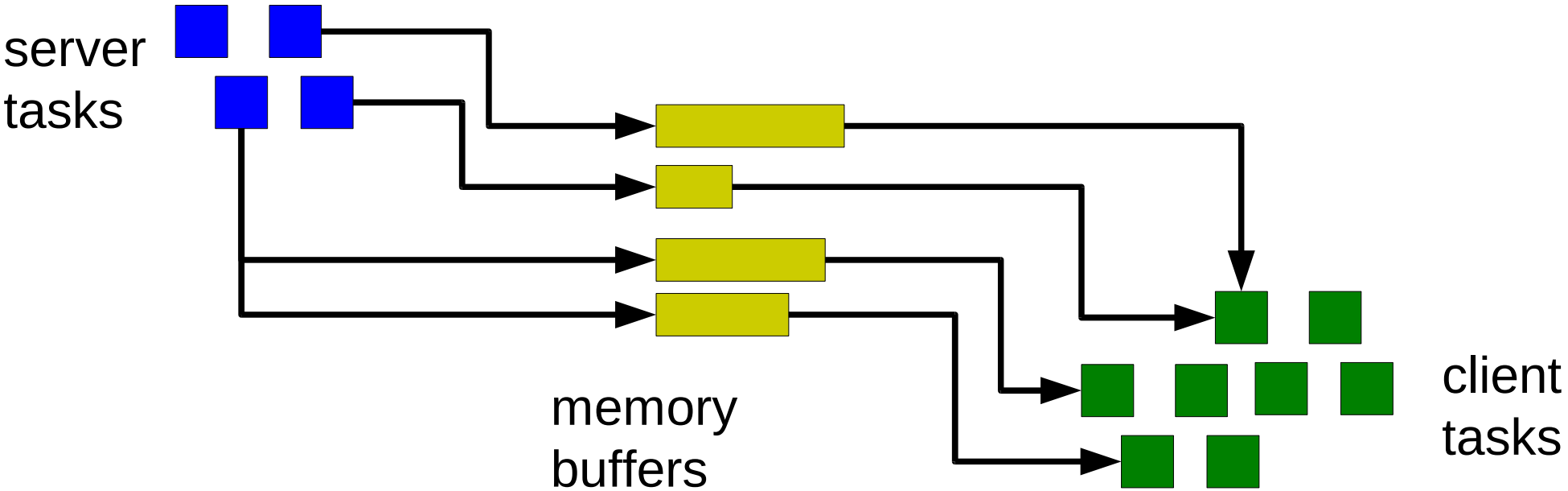

MPI based, single sided “point-to-point” communication between c&s tasks with overlapping grids

Example 3: On-line nesting: an alternative way to higher resolution

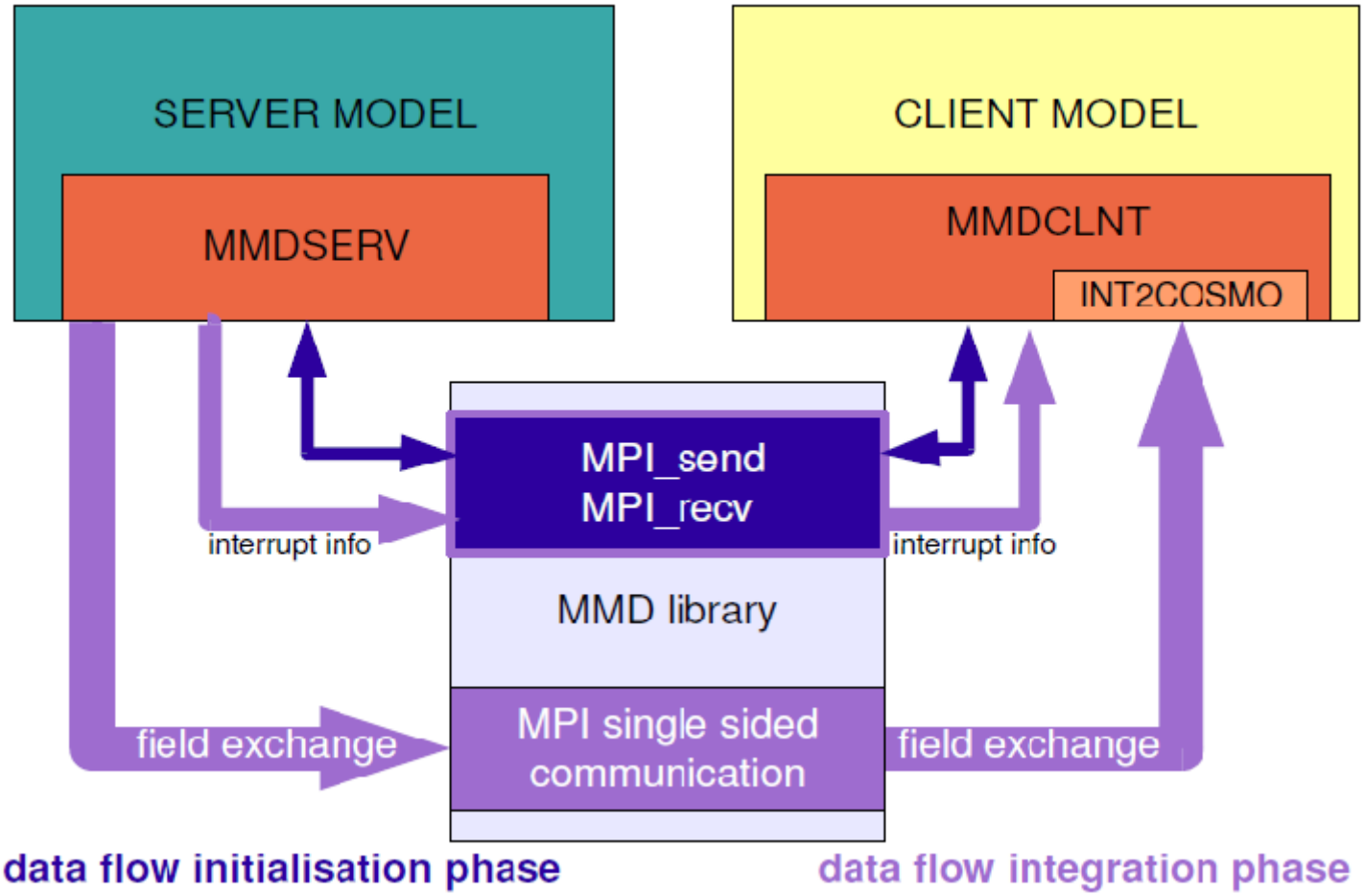

(Kerkweg & Jöckel, GMDD, 2011b)

Example 3: On-line nesting: an alternative way to higher resolution

no. of tasks
ECHAM-
COSMO-40 km
COSMO-7 km

4-4-56
is most
efficient !

additional
effort to
optimize
efficiency !

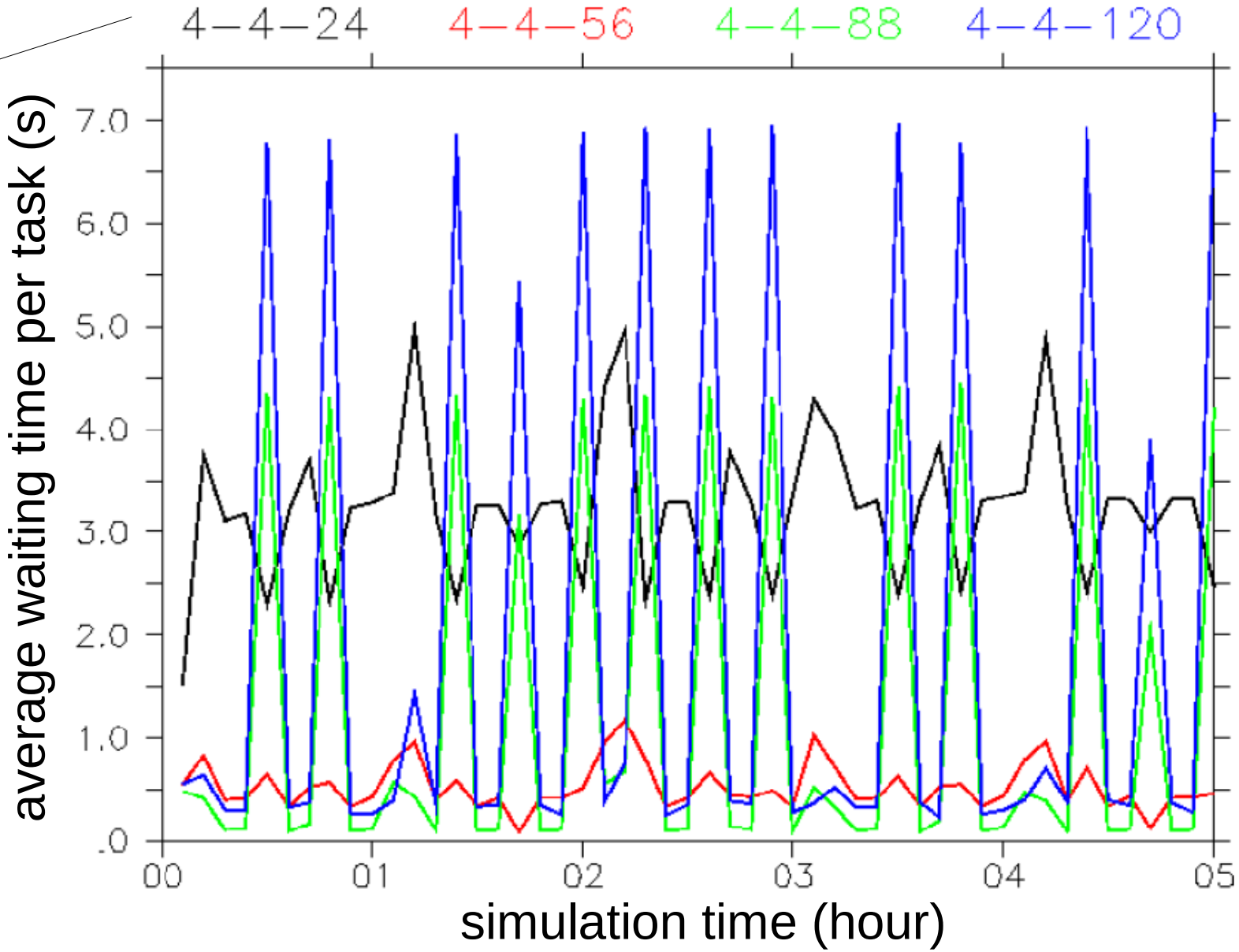

Summary

- ESMs are computationally demanding due to *continuously increasing complexity*
- *Operator splitting* is basis for coupling of model components
- Different coupling methods exist;
  challenge: efficiency – computation versus communication
- Exemplary challenges:
  - Atmospheric Chemistry: *internal coupling*
    → Load Imbalance (parallel decomp.)
  - Atmosphere – Ocean System: *internal* vs. *indirect external* coupling
    → both feasible, best choice depends on model (legacy code!), model setup, HPC-system
  - Global – Regional Nesting: *direct on-line coupling* (client – server approach)
    → complex timing, add. effort to achieve efficiency
- (exascale parallelisation, parallel I/O, memory/core reduction)