11th WCRR 2016
World Congress on Railway Research
29th May – 2nd June
Milan - Italy

Research and Innovation from Today Towards 2050

Design, Dimensioning and Analysis of a novel, locally emission-free Propulsion Concept for Regional Trains on non-electrified Railway Lines

Holger Dittus, Marcus Hoffmann, Sebastian Streit, Stefan Kaimer

German Aerospace Center (DLR), Stuttgart & Berlin, Germany

Contact: holger.dittus@dlr.de

31st May 2016
Holger Dittus
DLR

DLR

DLR Overview

- Exploration of the Earth and the solar system
- Research aimed at protecting the environment
- Development of environmentally-friendly technologies to promote mobility, communication and security

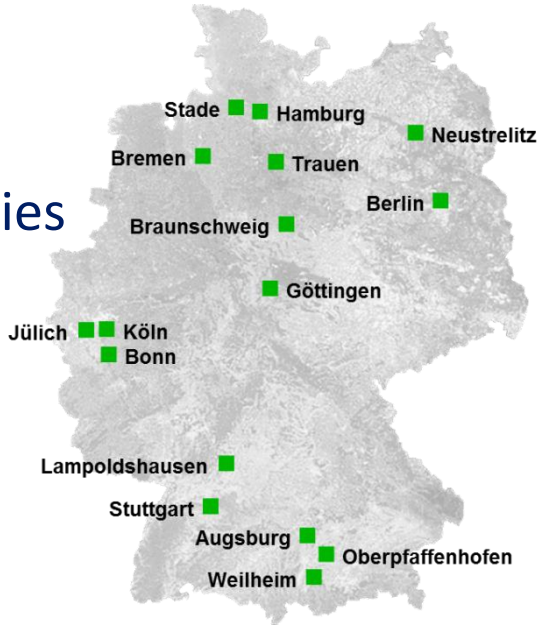

8,000 employees, 33 research institutes and facilities, 16 locations ■

Branch offices in Brussels, Paris, Tokyo and Washington

AERONAUTICS	SPACE	ENERGY	TRANSPORT	SECURITY

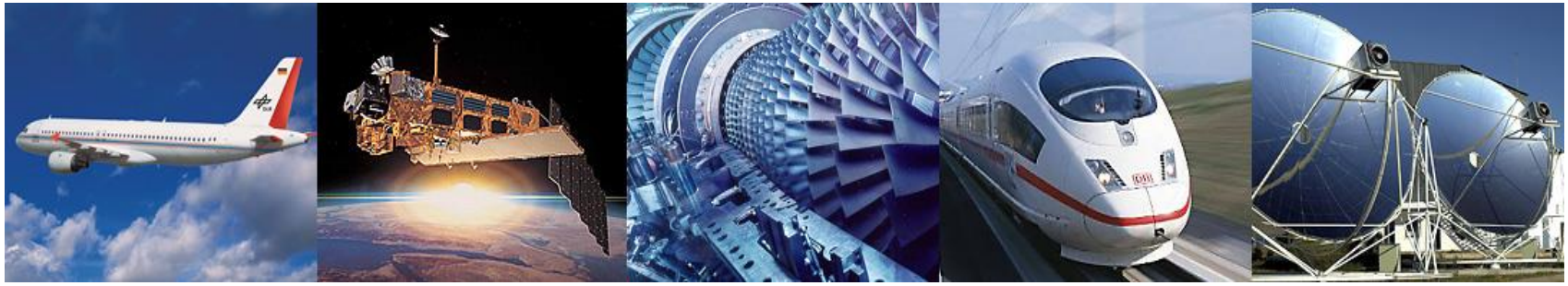

Next Generation Train (NGT)

Project Overview

Main Results

- Increasing the certified speed to 400 km/h
- 50% less energy consumption (compared to ICE 3)
- Car body with 30% less weight (compared to ICE 3)
- Increase of comfort
  - 30% more passengers
  - 25% reduction of vibrations
- Improvement of wear behavior and life cycle costs

NGT HST

→ ultra-high-speed train, traction power 16 MW, operational speed 400 km/h

NGT Link

→ feeder train set, traction power 2.5 MW, operational speed 230 km/h

NGT Cargo

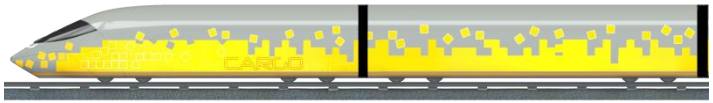

→ ultra-high-speed freight train set (e.g. for parcel services)

Motivation

EU28: Line electrification and CO_2-emissions from railways

- 46% of railway lines were non electrified in 2012 [1]
- Service on these lines typically provided by diesel traction with significant CO_2-, NOx and PM emissions
- Example SBB in 2015 [2] [3]:
  - Line electrification > 95%
  - Diesel energy consumption < 4%
  - 31% of total CO_2-emissions

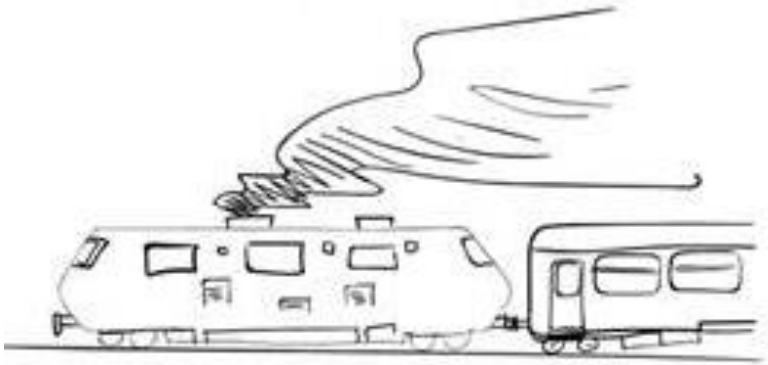

- Internal CO_2 - reduction target of UIC (baseline 1990) [4]:
  - by 2030: **-50%**
  - by 2050: **-75%**

[1] International Union of Railways - UIC, "Rail Transport and Environment, Facts & Figures", 2015
[2] http://www.sbb.ch/sbb-konzern/ueber-die-sbb/zahlen-und-fakten/umwelt/energieverbrauch.html
[3] http://www.sbb.ch/sbb-konzern/ueber-die-sbb/zahlen-und-fakten/umwelt/co2-emissionen.html
[4] International Union of Railways - UIC, "Railway Handbook 2015", 2015

Motivation

What could be the future solution?

Possible Solution		Advantage	Disadvantage
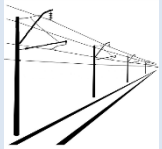	Full electrification	No local emissions	High investment cost, low utilisation
	Natural gas fuel	Reduction of emissions	Fuel stations, local emissions
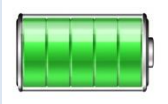	Pure battery multiple unit	No local emissions, regeneration	Operation range, packaging, costs
	Fuel cell hybrid propulsion	No local emissions, regeneration, range	Fuel stations

➔ No simple solution, novel concepts required

Approach for future propulsion system

Conceptual requirements

- Propulsion system with emission-free train operation on non-electrified lines
- Boost energy efficiency by recuperation of brake energy
- One concept with different configurations to provide modularity, scalability and flexibility in different scenarios
- Smooth transition from current non-electrified lines to future system

DLR approach

- Combination of partial electrification and on-board energy storage

Implementation strategy

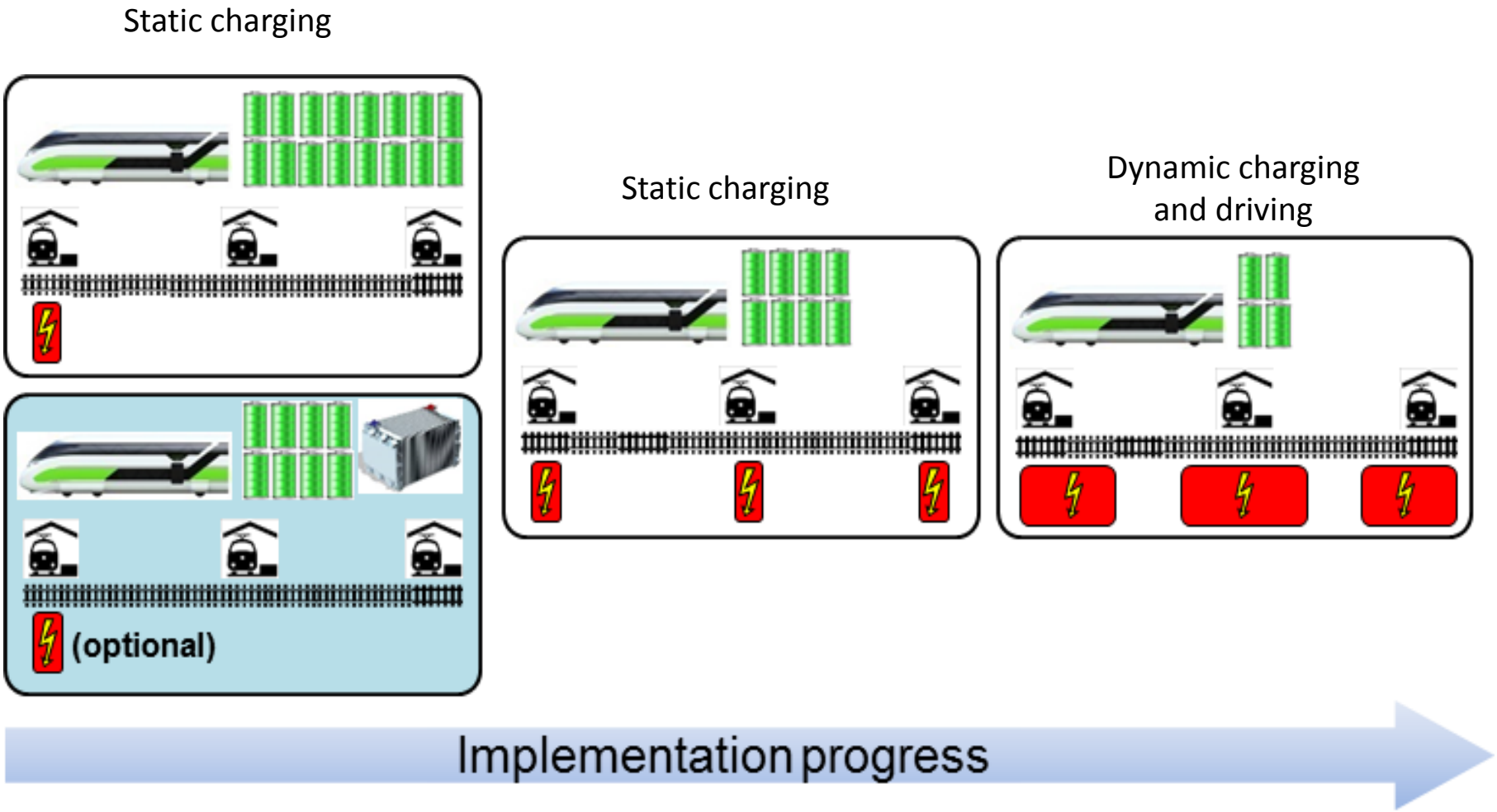

External Energy Supply

Comparison of options for partial electrification

AC-systems:

- Long distances, high power
- High investment cost
- Typically fed by high voltage grid (110 kV)
- Max. power during standstill: 1200 kW [1]

DC-systems:

- Shorter distances, lower power
- Fed by medium voltage grid (10-30 kV)
- Max. power during standstill: 600 kW [1]

➔ **Pantograph limits fast charging – other options?**

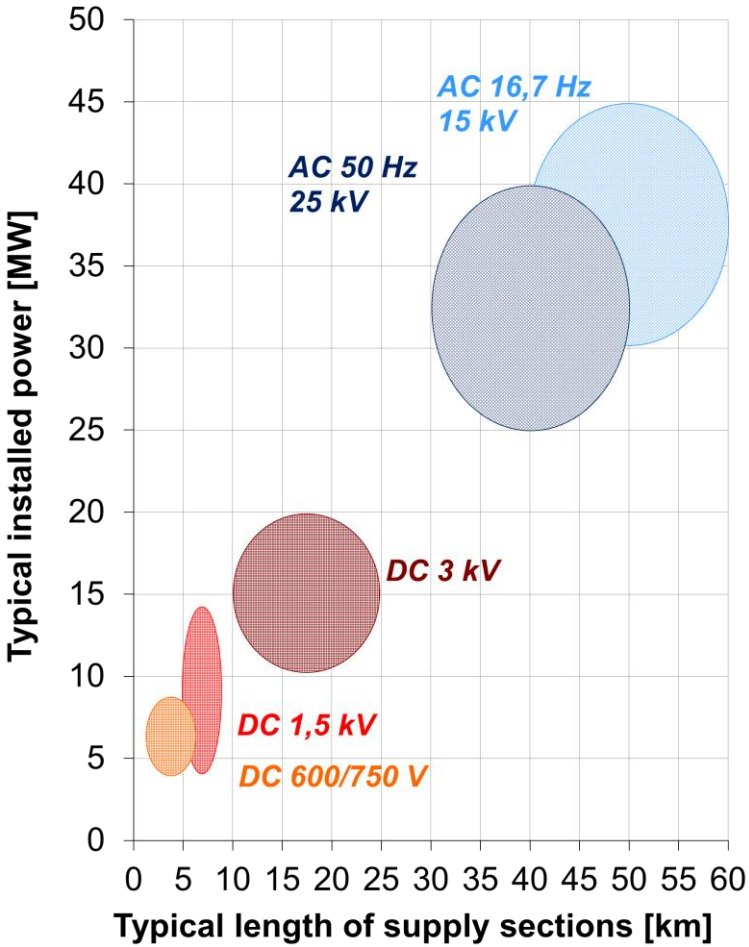

[1] DIN EN 50367 – Railway Applications – Current collection systems

External Energy Supply

Excursus: Inductive Energy Transfer System (IETS)

Concept of a catenary-free energy supply system using inductive power transmission

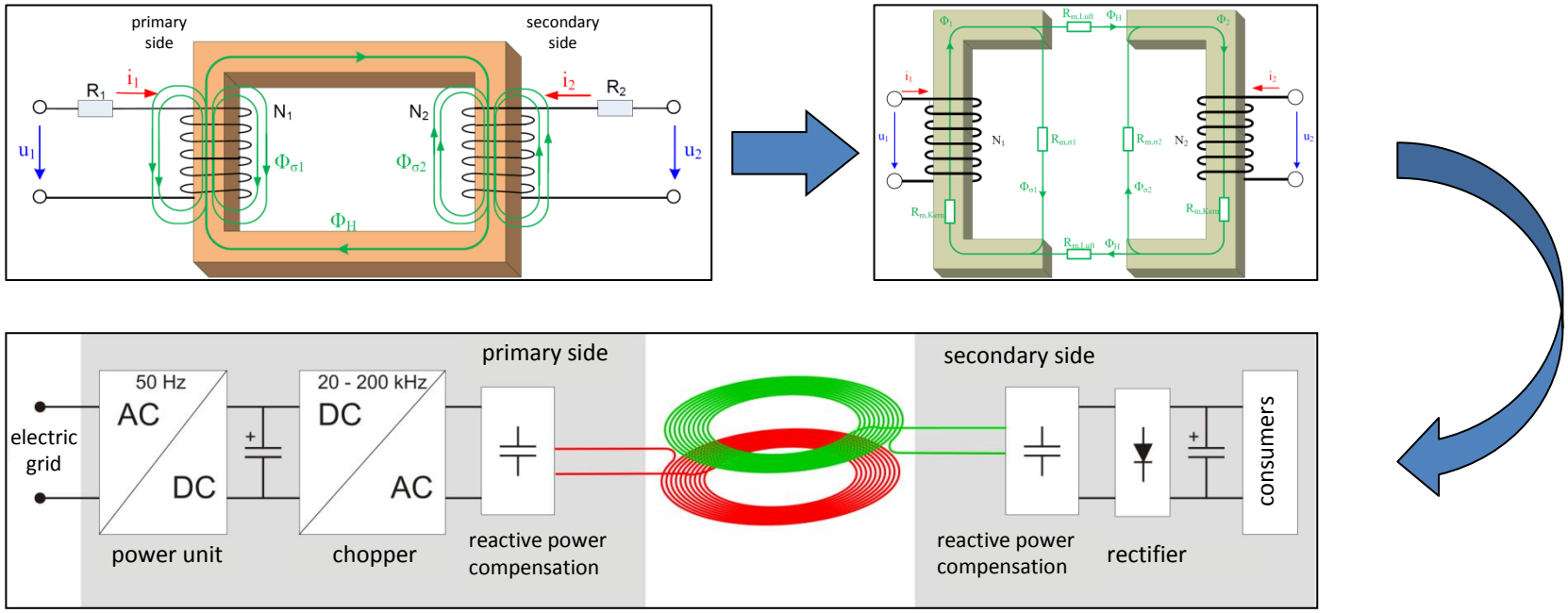

(Source: Institute of Electrical Energy Conversion, University of Stuttgart)

➔ **No limitation from pantograph during standstill**

External Energy Supply

Excursus: Inductive Energy Transfer System (IETS)

For further details on IETS see WCRR-Paper No. 740:

External Energy Supply

IETS satisfies conceptual requirements

Inductive energy transfer system (IETS):

- Flexible in power dimensioning
- Scalable length of electrified track
- Static and dynamic power transmission possible
- Fed by medium voltage grid (10-30 kV)

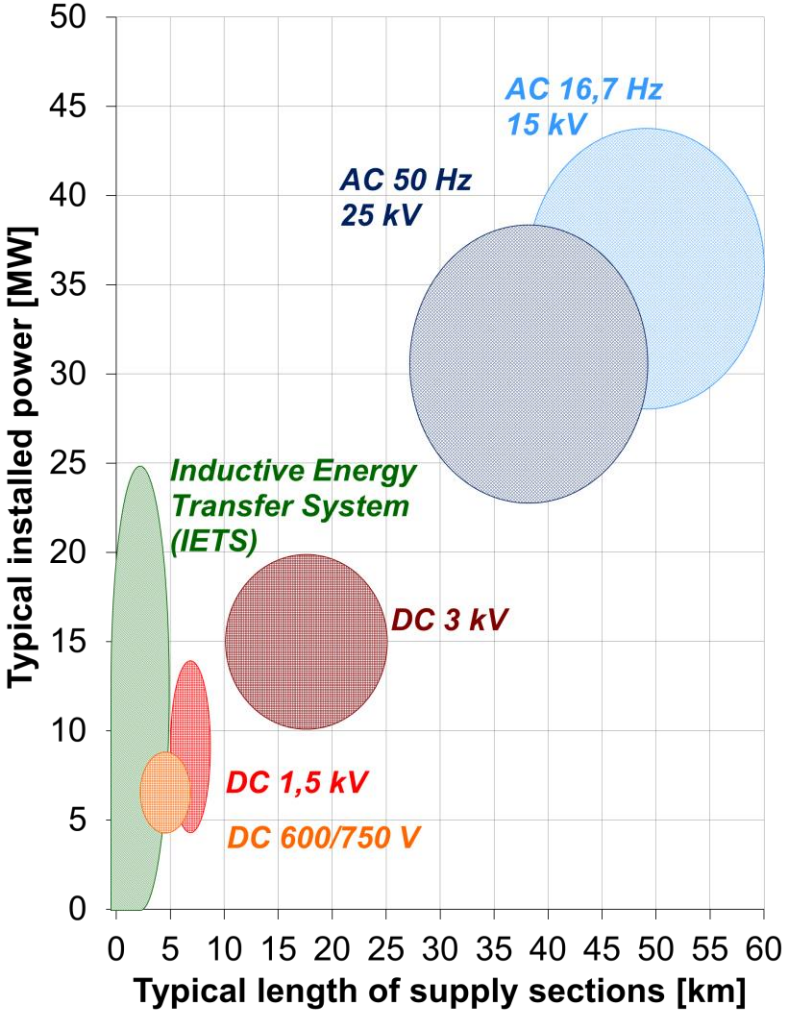

Propulsion concept – main current circuit

Modular approach – base module

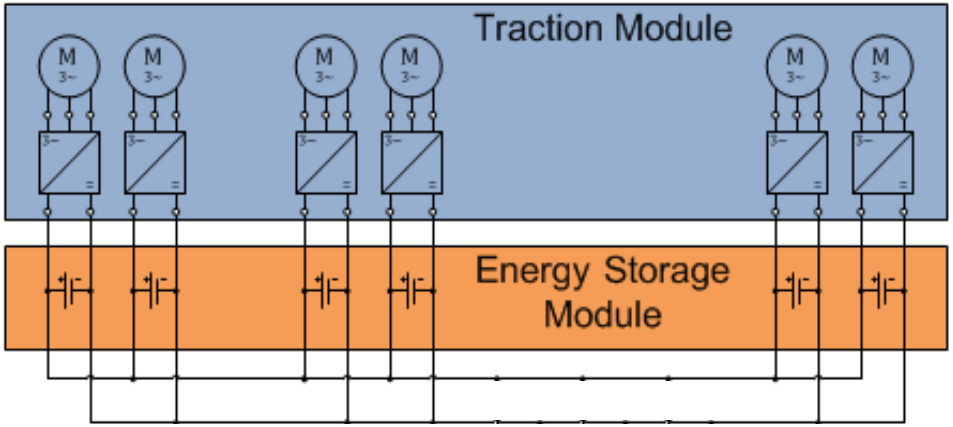

Propulsion concept – main current circuit

Modular approach – base module with IETS

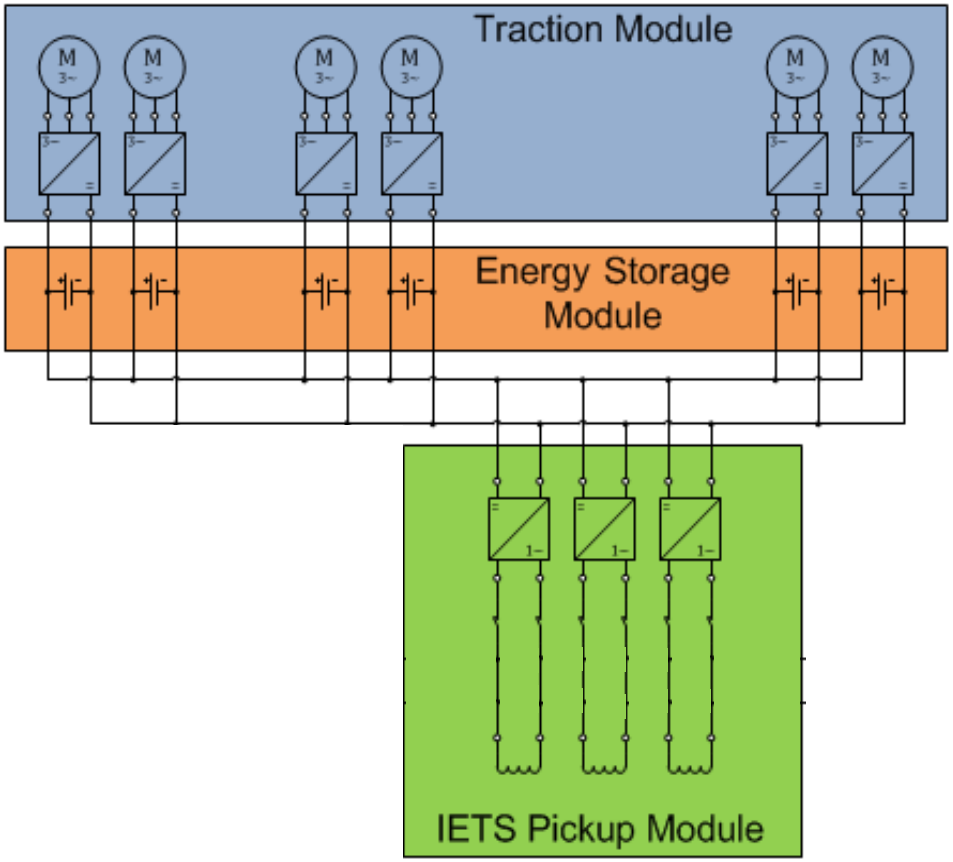

Propulsion concept – main current circuit

Modular approach – base module with hybrid / range extender

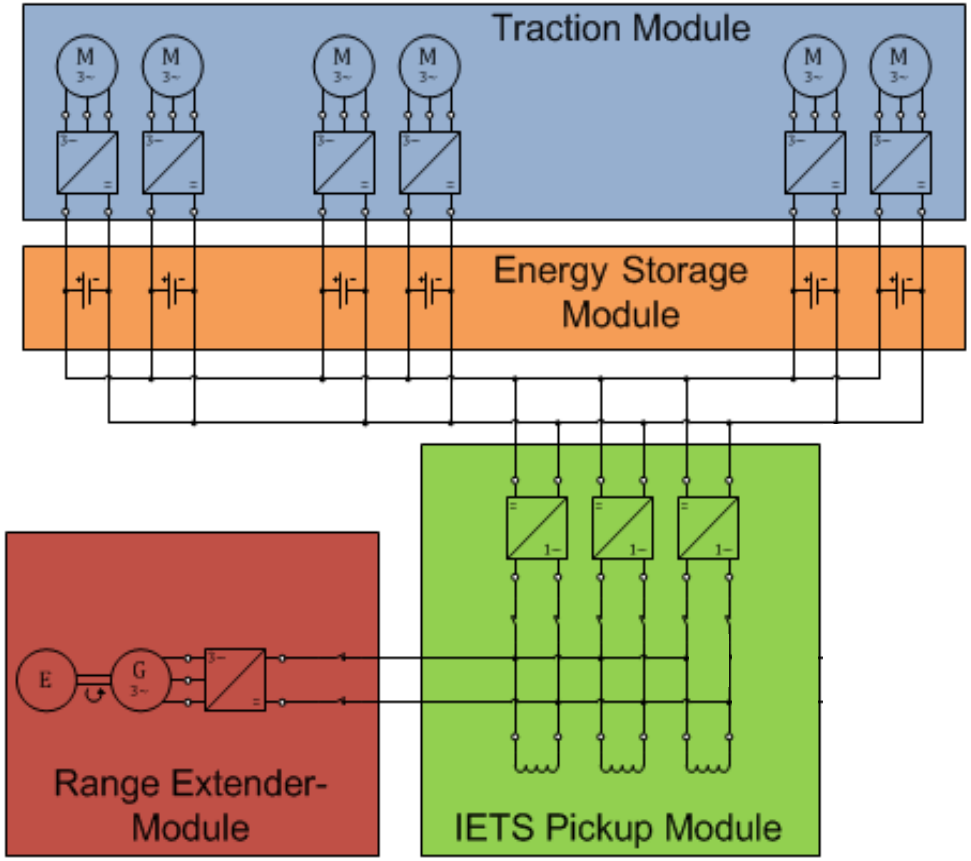

Propulsion concept – main current circuit

Modular approach – base module with catenary module

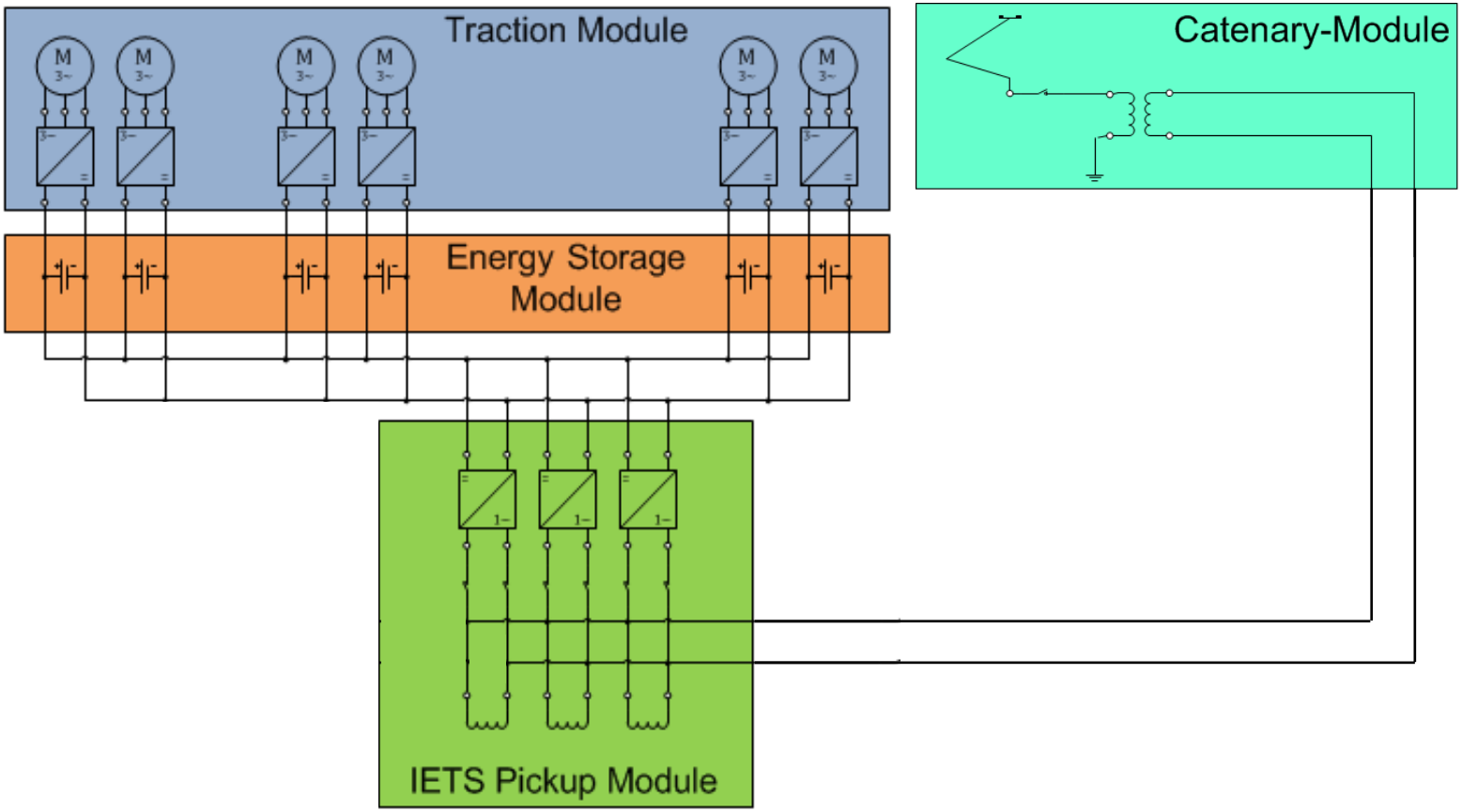

Use case NGT LINK

- Innovative train concept with all-wheel drive
- Double-decker regional and intercity train
- Serves as basis for requirements and packaging concept

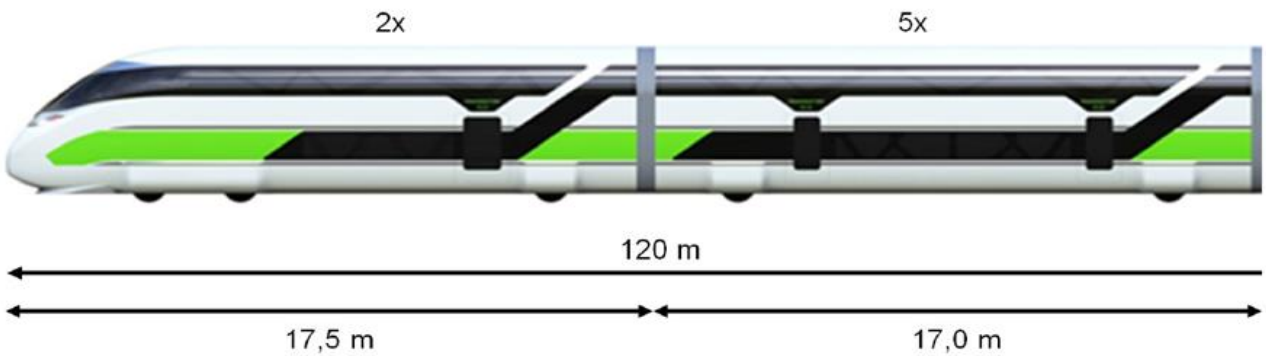

Relevant specifications

Maximum tractive power at wheel	2500 kW
Starting tractive force at wheel	412 kN
Design mass (fully loaded)	272 t
Number of wheelsets and traction drives	32

Use case NGT LINK: Main current circuit

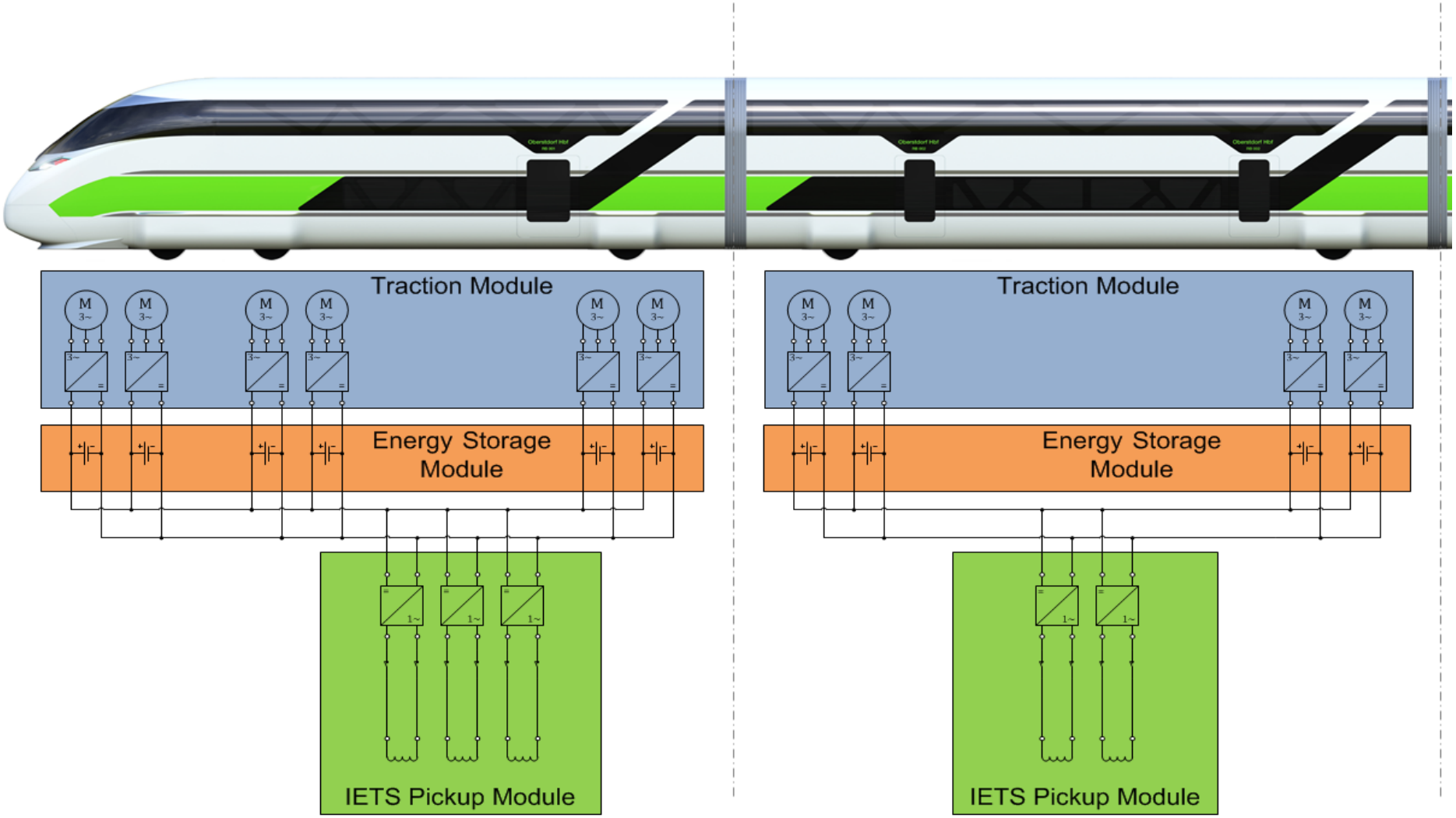

Use case NGT LINK: Reference scenario

- Round-trip on non electrified line Ulm - Oberstdorf (Germany)
- Intermediate stations Memmingen and Kempten
- Overall distance of roundtrip 254 km
- Stoppage time at turning station Oberstdorf: 20 minutes
- Aux power at intermediate circuit: 303 kW continuous (worst case)

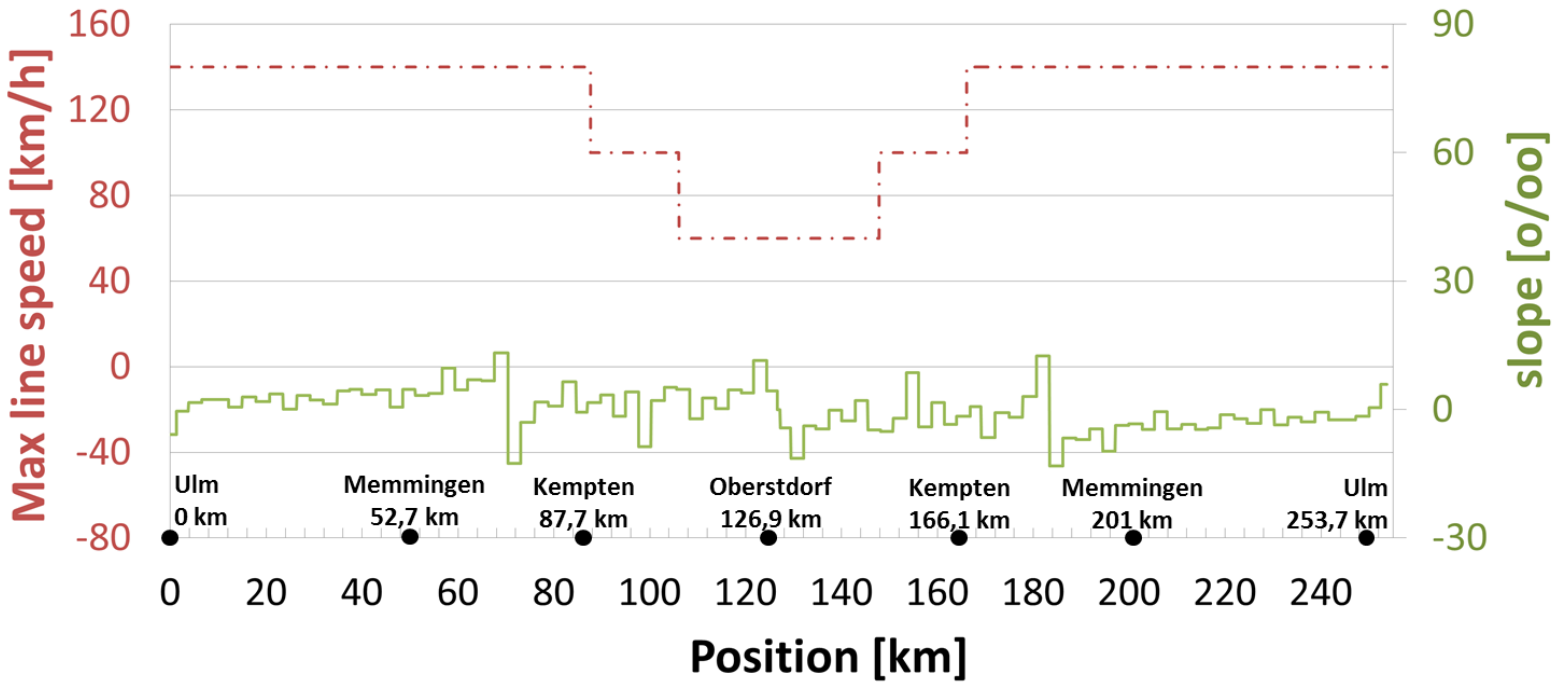

Use case NGT LINK: Battery energy trend

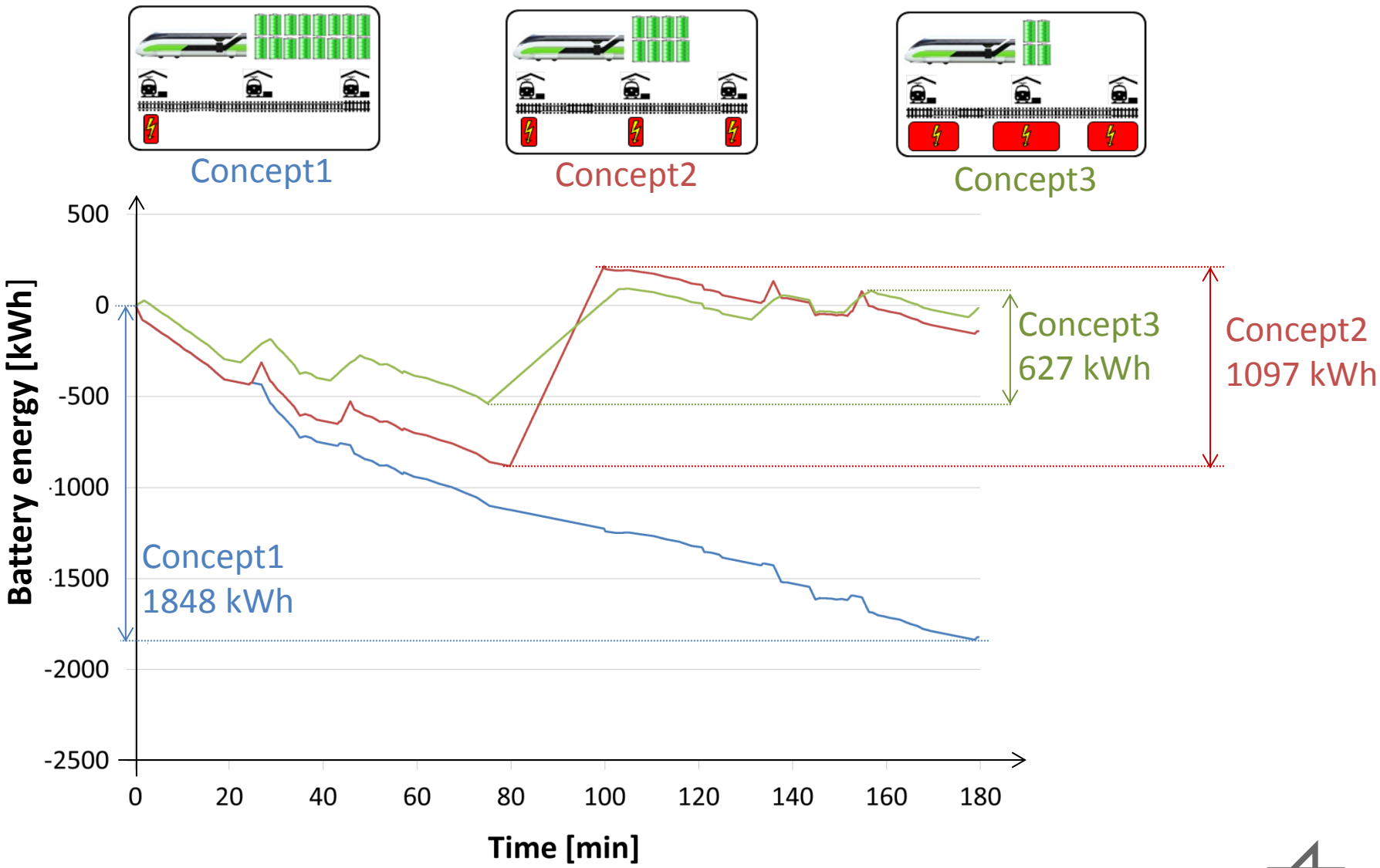

Use case NGT LINK: Battery characteristics

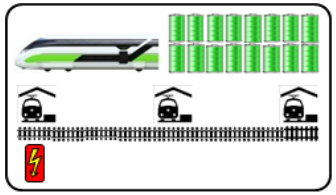

Concept1

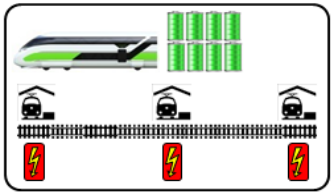

Concept2

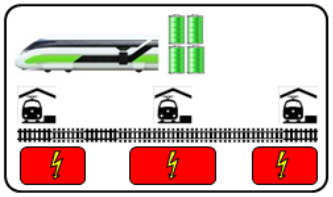

Concept3

		Concept1	Concept2	Concept3
Used battery capacity	kWh	1848	1097	627
DoD assumption	%	60	60	60
Installed battery capacity	kWh	3080	1828	1045
Discharge power	kW	3290	3290	1882
Charge power	kW	1797*	3290	1350
C-rate discharge	1/h	1.1	1.8	1.8
C-rate charge	1/h	0.6*	1.8	1.3

* No external charging during roundtrip, C-rate calculated from recuperation power

Propulsion concept dimensioning

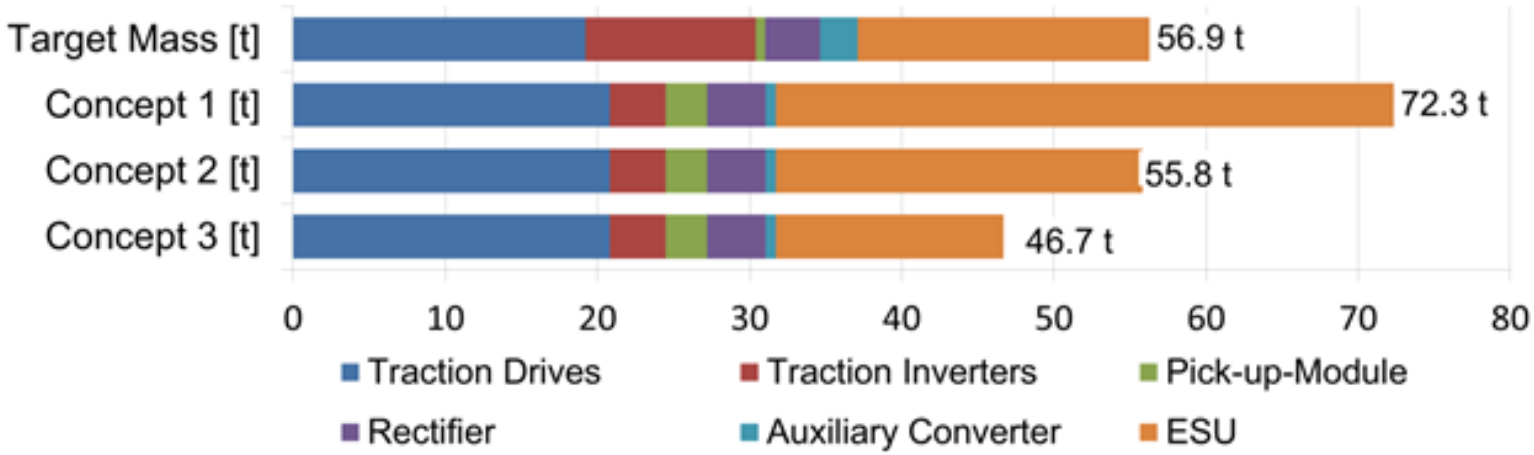

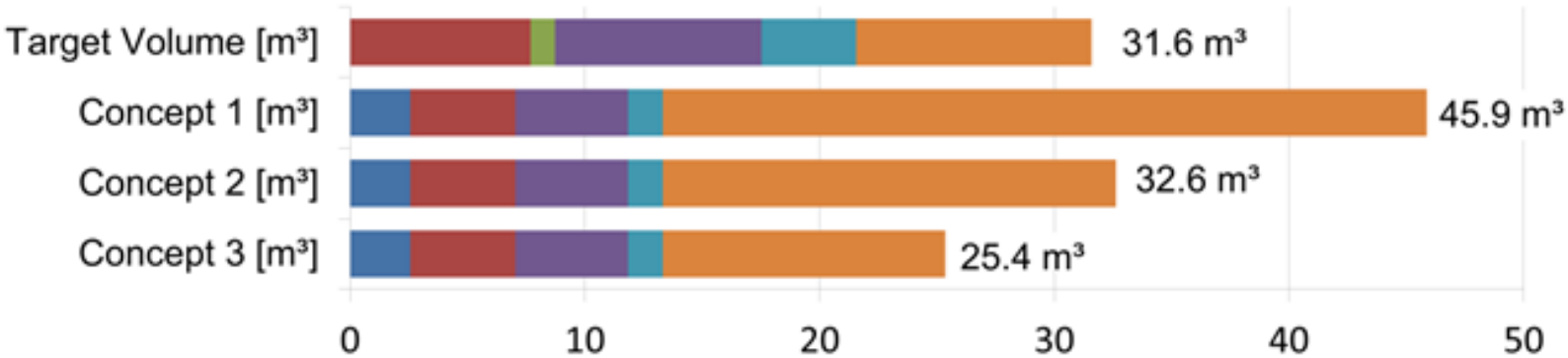

- Concept 1 not viable due to mass and volume restrictions
- Other concepts are in accordance with the conceptual design

Conclusion & Outlook

- Pure battery propulsion (charging only at terminal station):
  - not viable for NGT LINK due to mass and volume restrictions
  - useful for tracks with shorter non-electrified sections

- Dynamic charging concept reduces battery capacity and power
  - IETS power is used instantaneously for acceleration

- DLR propulsion concept offers opportunity to achieve UIC goal for 2050 (-75% CO_2-emission)

- Outlook:
  Evaluate the concept for other use cases (tracks and vehicles)

Contact

Holger Dittus

German Aerospace Center (DLR)
Institute of Vehicle Concepts
Pfaffenwaldring 38 - 40
D-70563 Stuttgart
Phone: +49 (0)711 6862 - 581
holger.dittus@dlr.de
www.dlr.de

Sebastian Streit

German Aerospace Center (DLR)
Institute of Vehicle Concepts
Meitnerstraße 10
D-70563 Stuttgart
Phone: +49 (0)711 6862 - 700
sebastian.streit@dlr.de
www.dlr.de

Marcus Hoffmann

German Aerospace Center (DLR)
Institute of Vehicle Concepts
Rutherfordstraße 2
D-12489 Berlin
Phone: +49 (0)30 67055 - 626
marcus.hoffmann@dlr.de
www.dlr.de

Stefan Kaimer

German Aerospace Center (DLR)
Institute of Vehicle Concepts
Rutherfordstraße 2
D-12489 Berlin
Phone: +49 (0)30 67055 - 623
stefan.kaimer@dlr.de
www.dlr.de